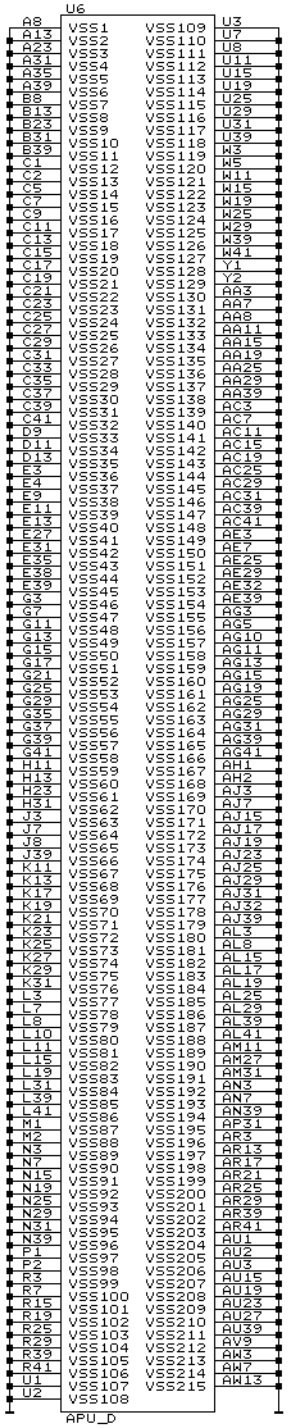

APU ground

DRAM bypass

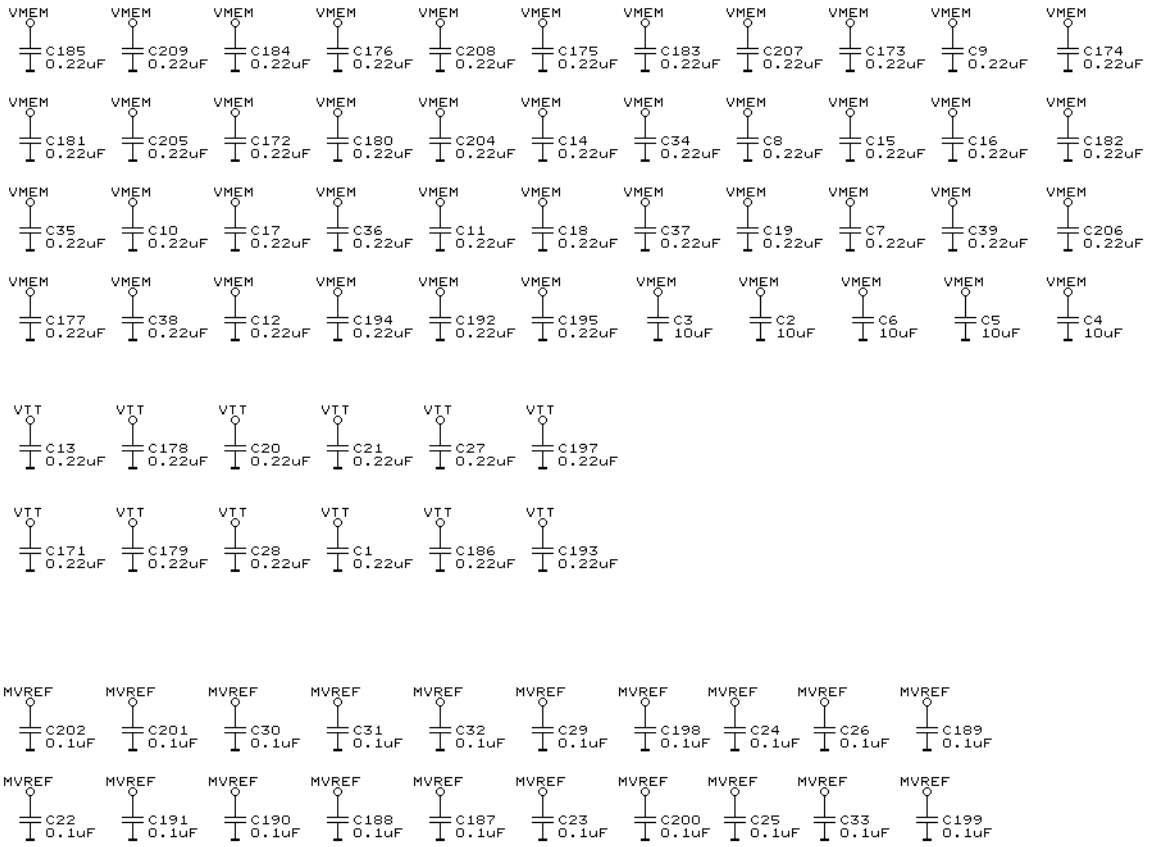


```
!LINK
!2.SCH
!3.SCH
!4.SCH
!5.SCH
!6.SCH
!7.SCH
!8.SCH
!9.SCH
!10.SCH
!11.SCH
!12.SCH
!13.SCH
!14.SCH
!15.SCH
!16.SCH
!17.SCH
!18.SCH
```

(C)2016 PC Engines GmbH

Title	Ground, DRAM bypass	
Size B	Document Number APU	REV 4D
Date: June 8, 2016	Sheet 1 of 18	

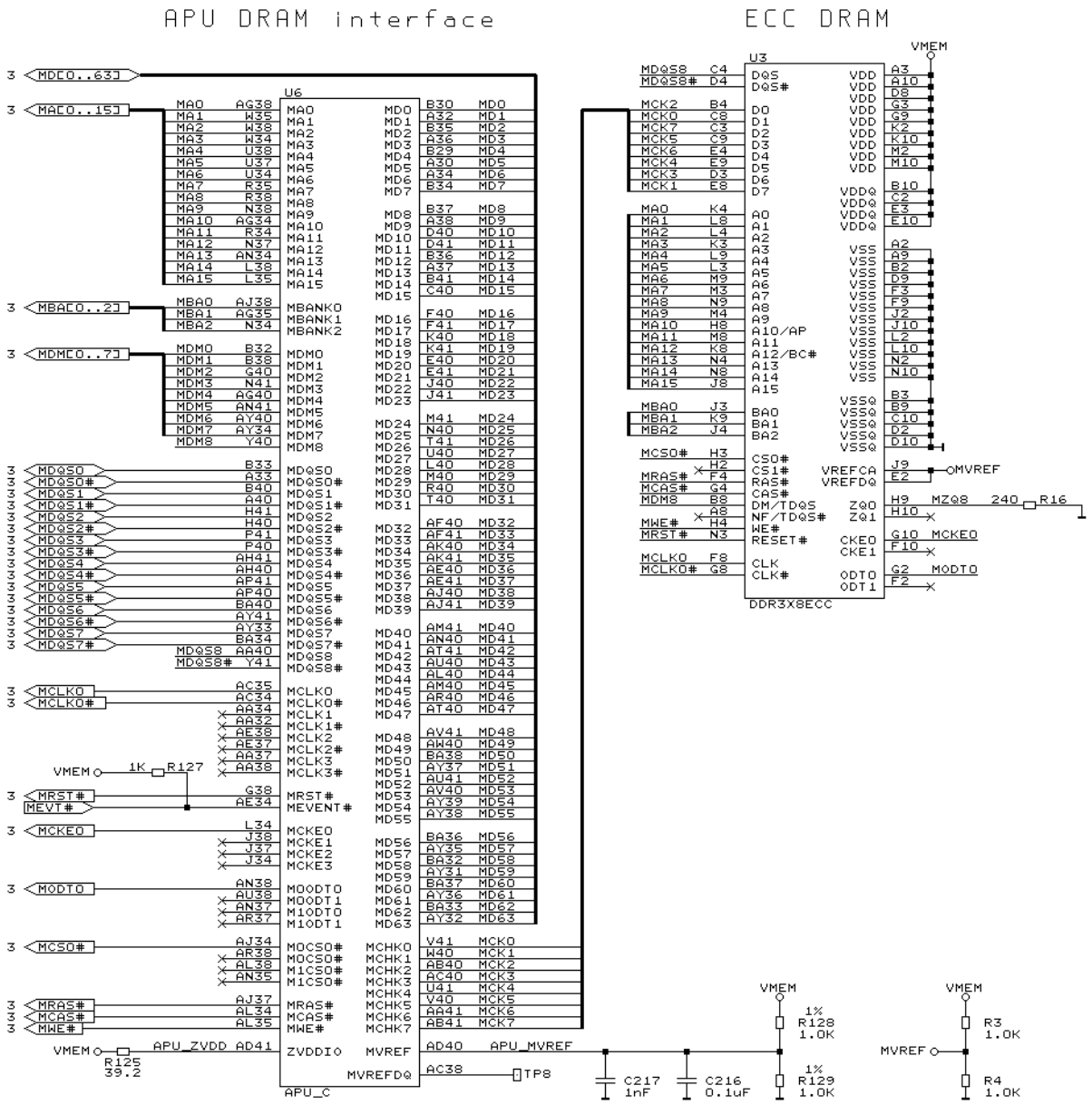

(C)2016 PC Engines GmbH

Title	DRAM interface / power	
Size B	Document Number APU	REV 4D
Date: February 5, 2016	Sheet 2 of 18	

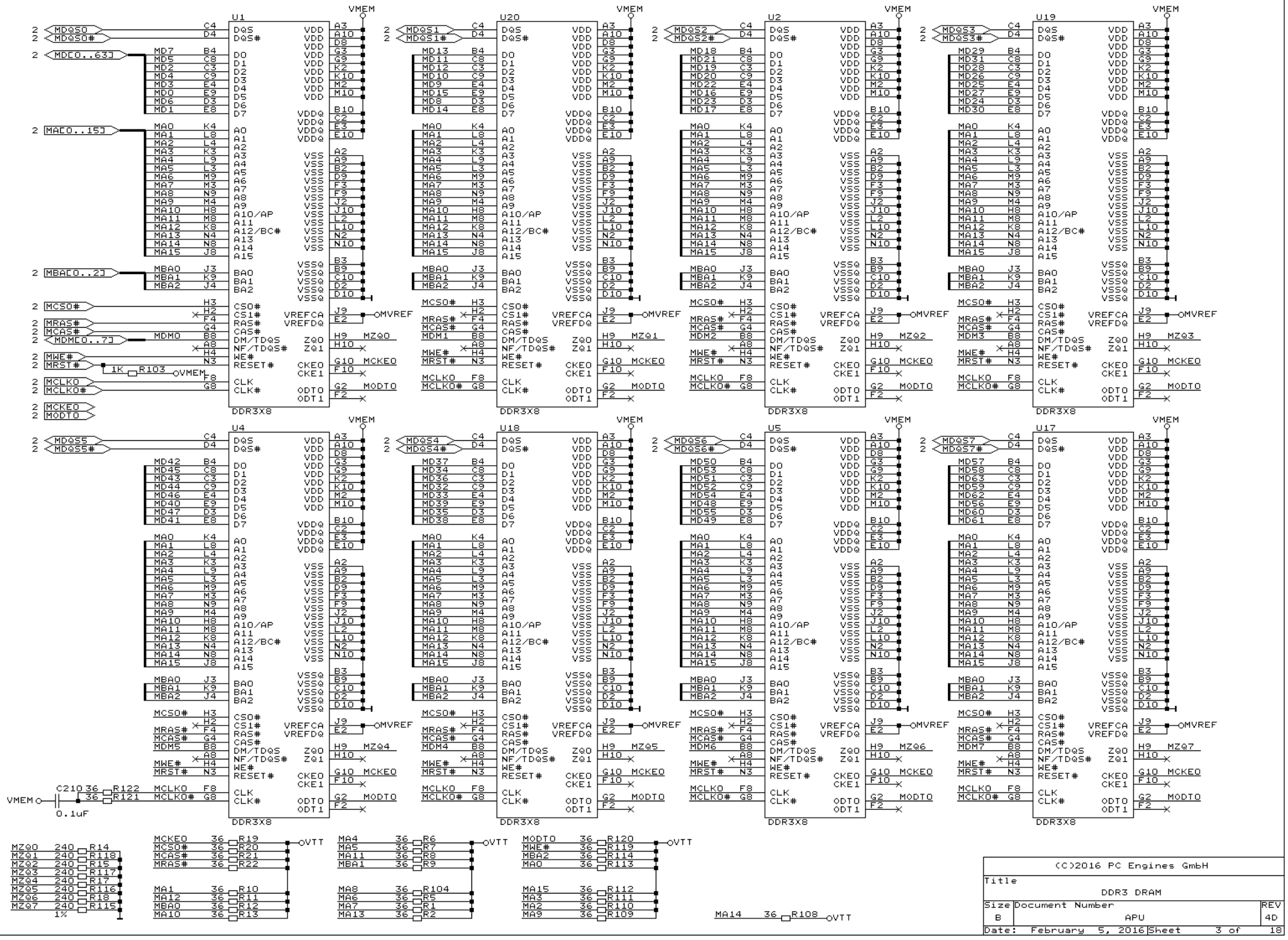
U1
U20
U2
U19
U4
U18
U5
U17
DDR3X8
VMEM
VTT
MDQS0
MDQS0#
MD[0..63]
MA[0..15]
MBA[0..2]
MCS0#
MRAS#
MCAS#
MDM[0..7]
MWE#
MRST#
MCLK0
MCLK0#
MCKE0
MODT0
MVREF
1K
R103
C210
R122
R121
0.1uF
MZQ0
MZQ1
MZQ2
MZQ3
MZQ4
MZQ5
MZQ6
MZQ7
R14
R118
R15
R117
R17
R116
R18
R115
1%
R19
R20
R21
R22
R10
R11
R12
R13
R6
R7
R8
R9
R104
R5
R1
R2
R120
R119
R114
R113
R112
R111
R110
R109
R108
(C)2016 PC Engines GmbH
Title
DDR3 DRAM
Size
B
Document Number
APU
REV
4D
Date: February 5, 2016
Sheet 3 of 18

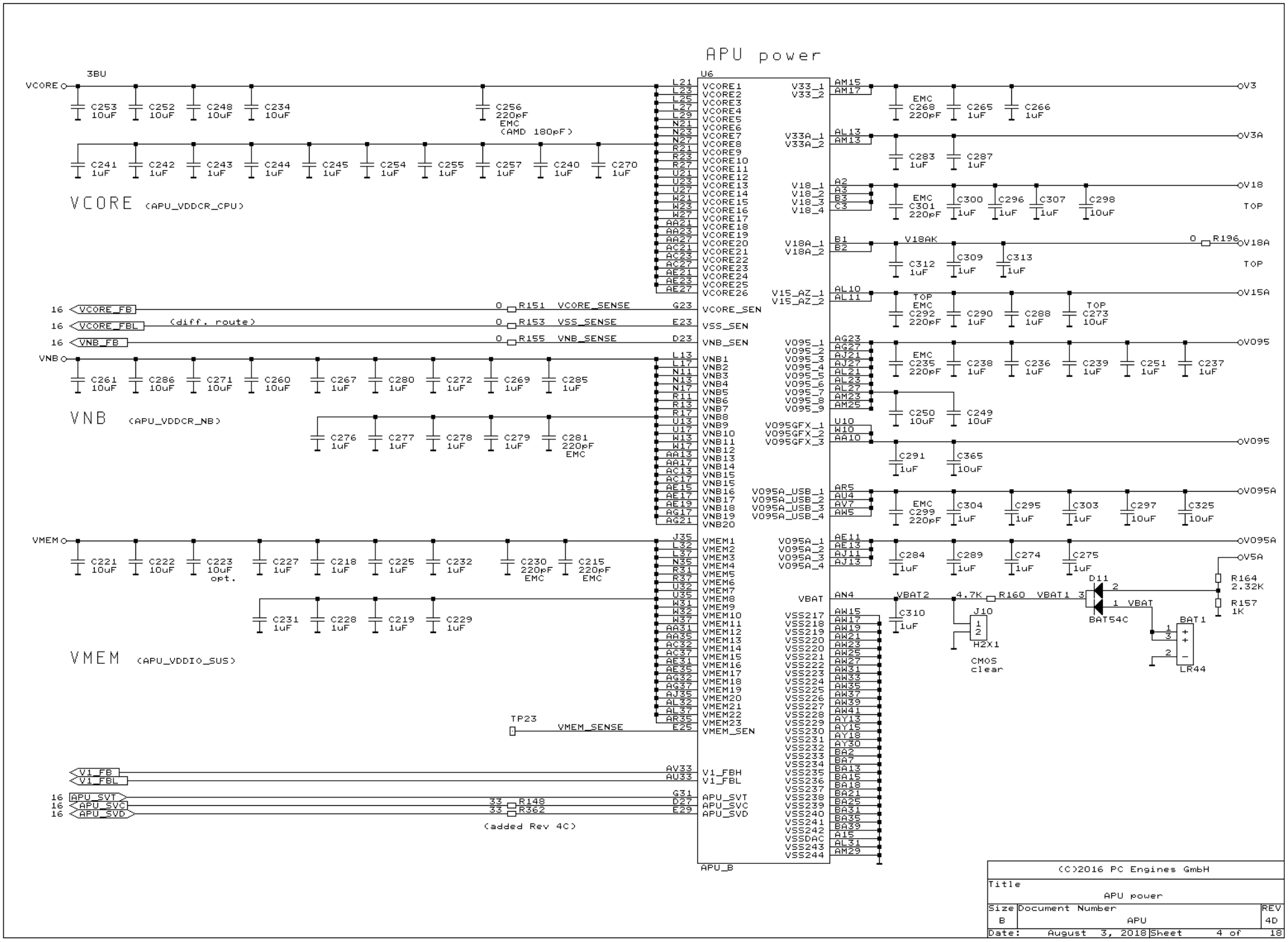
APU power
U6
VCORE
3BU
C253 10uF
C252 10uF
C248 10uF
C234 10uF
C256 220pF EMC (AMD 180pF)
C241 1uF
C242 1uF
C243 1uF
C244 1uF
C245 1uF
C254 1uF
C255 1uF
C257 1uF
C240 1uF
C270 1uF
VCORE (APU_VDDCR_CPU)
16 VCORE_FB
16 VCORE_FBL
(diff. route)
16 VNB_FB
0 R151 VCORE_SENSE
0 R153 VSS_SENSE
0 R155 VNB_SENSE
VNB
C261 10uF
C286 10uF
C271 10uF
C260 10uF
C267 1uF
C280 1uF
C272 1uF
C269 1uF
C285 1uF
VNB (APU_VDDCR_NB)
C276 1uF
C277 1uF
C278 1uF
C279 1uF
C281 220pF EMC
VMEM
C221 10uF
C222 10uF
C223 10uF opt.
C227 1uF
C218 1uF
C225 1uF
C232 1uF
C230 220pF EMC
C215 220pF EMC
C231 1uF
C228 1uF
C219 1uF
C229 1uF
VMEM (APU_VDDIO_SUS)
TP23
VMEM_SENSE
V1_FB
V1_FBL
16 APU_SVT
16 APU_SVC
16 APU_SVD
33 R148
33 R362
(added Rev 4C)
V3
V3A
V18
TOP
V18A
V15A
V095
V095A
V5A
EMC C268 220pF
C265 1uF
C266 1uF
C283 1uF
C287 1uF
EMC C301 220pF
C300 1uF
C296 1uF
C307 1uF
C298 10uF
V18AK
0 R196
C312 1uF
C309 1uF
C313 1uF
TOP EMC C292 220pF
C290 1uF
C288 1uF
TOP C273 10uF
EMC C235 220pF
C238 1uF
C236 1uF
C239 1uF
C251 1uF
C237 1uF
C250 10uF
C249 10uF
C291 1uF
C365 10uF
EMC C299 220pF
C304 1uF
C295 1uF
C303 1uF
C297 10uF
C325 10uF
C284 1uF
C289 1uF
C274 1uF
C275 1uF
R164 2.32K
R157 1K
D11
BAT54C
VBAT
VBAT2
4.7K R160 VBAT1
C310 1uF
J10
H2X1
CMOS clear
BAT1
LR44
APU_B
(C)2016 PC Engines GmbH
Title
APU power
Size B
Document Number
APU
REV 4D
Date: August 3, 2018
Sheet 4 of 18

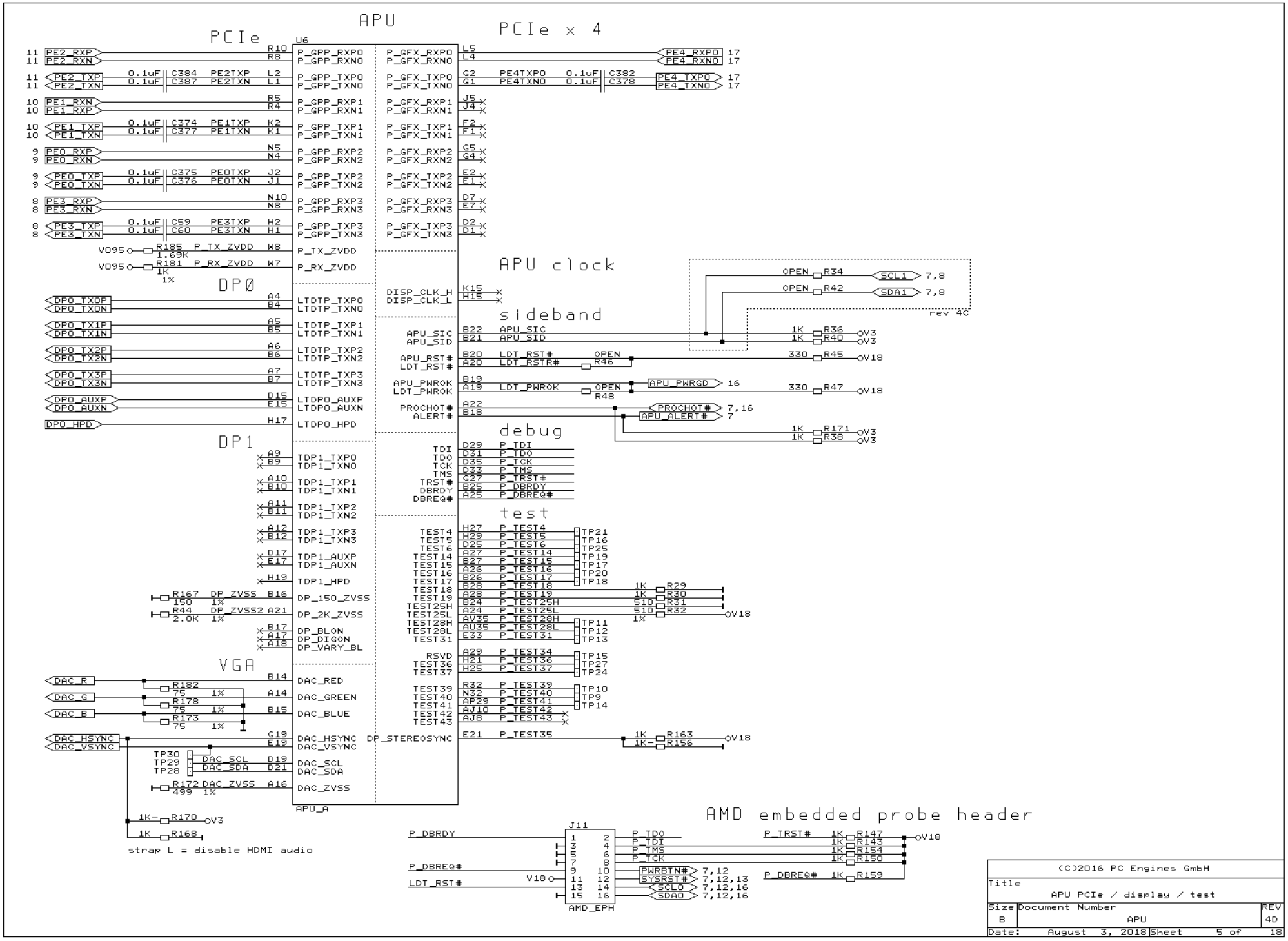
APU
PCIe
PCIe x 4
U6
APU_A
DP0
DP1
VGA
APU clock
sideband
debug
test
AMD embedded probe header
J11
AMD_EPH
strap L = disable HDMI audio
rev 4C
(C)2016 PC Engines GmbH
Title
APU PCIe / display / test
Size B
Document Number
APU
REV 4D
Date: August 3, 2018
Sheet 5 of 18

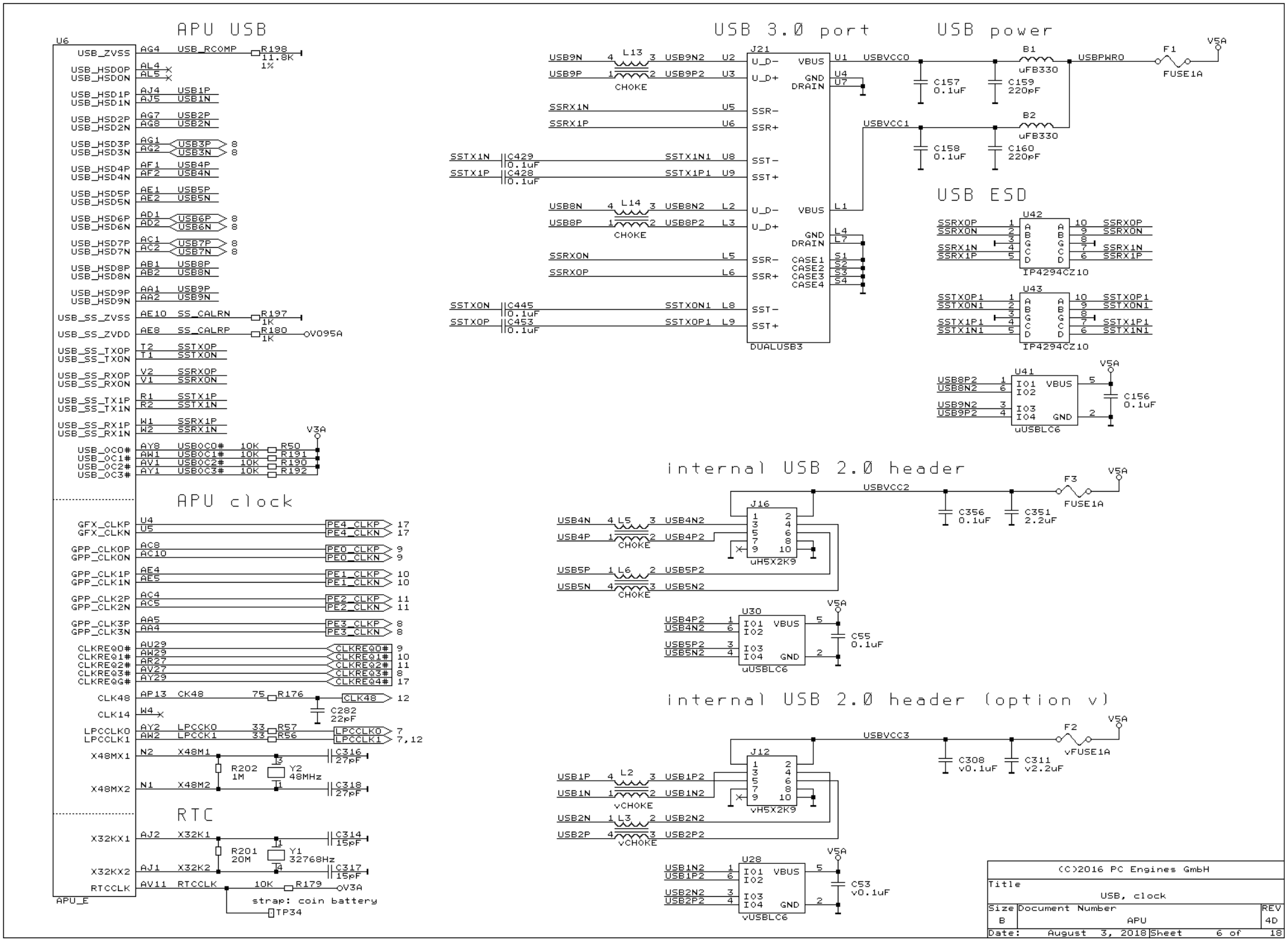
APU USB
USB 3.0 port
USB power
USB ESD
internal USB 2.0 header
internal USB 2.0 header (option v)
APU clock
RTC
U6
J21
DUALUSB3
U42
IP4294CZ10
U43
IP4294CZ10
U41
uUSBLC6
J16
uH5X2K9
U30
uUSBLC6
J12
vH5X2K9
U28
vUSBLC6
APU_E
strap: coin battery
TP34
(C)2016 PC Engines GmbH
Title
USB, clock
Size B
Document Number
APU
REV 4D
Date: August 3, 2018
Sheet 6 of 18

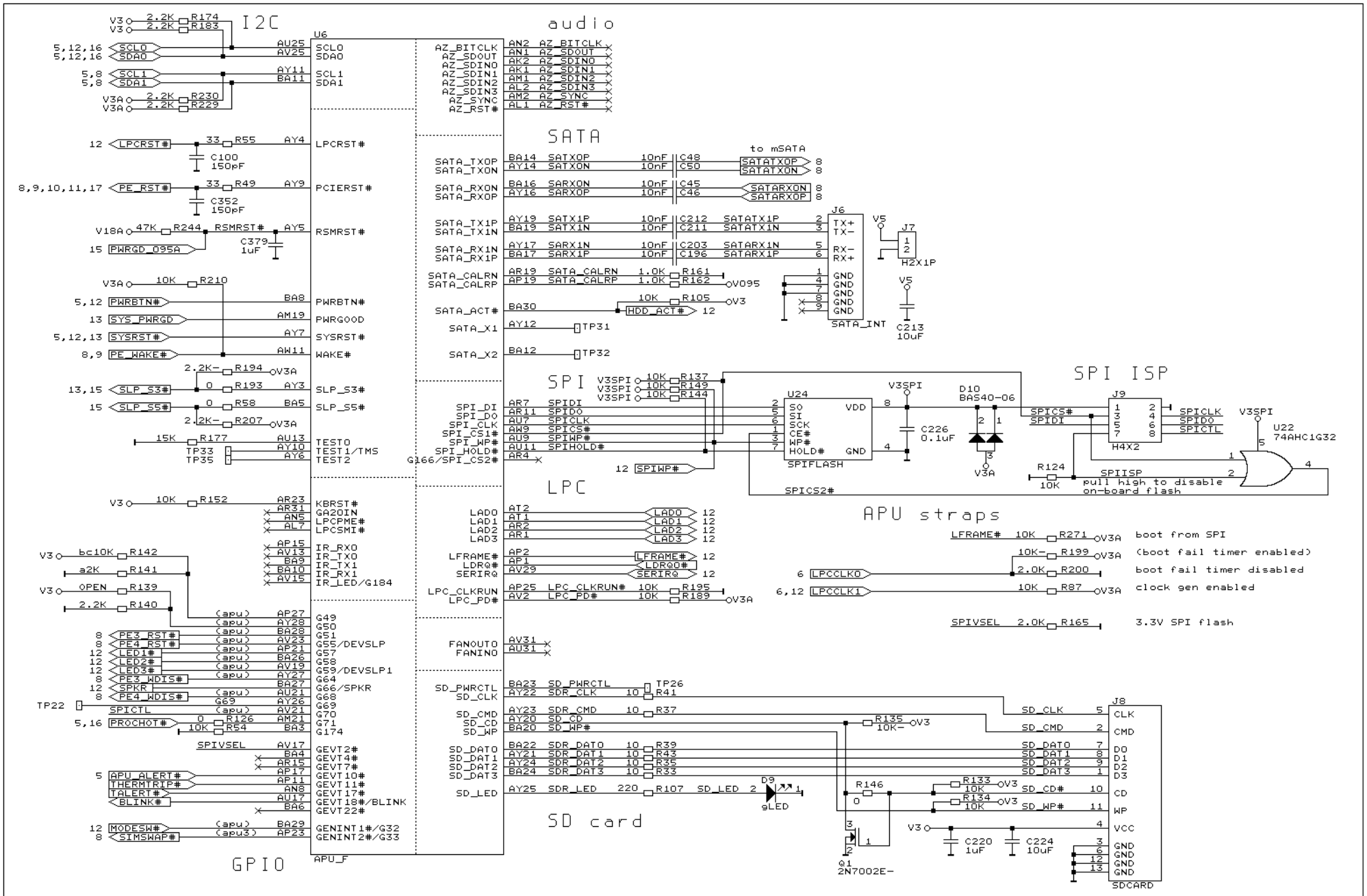

(C)2016 PC Engines GmbH

Title	SATA, LPC, SPI	
Size B	Document Number APU	REV 4D
Date: January 12, 2017	Sheet 7 of 18	

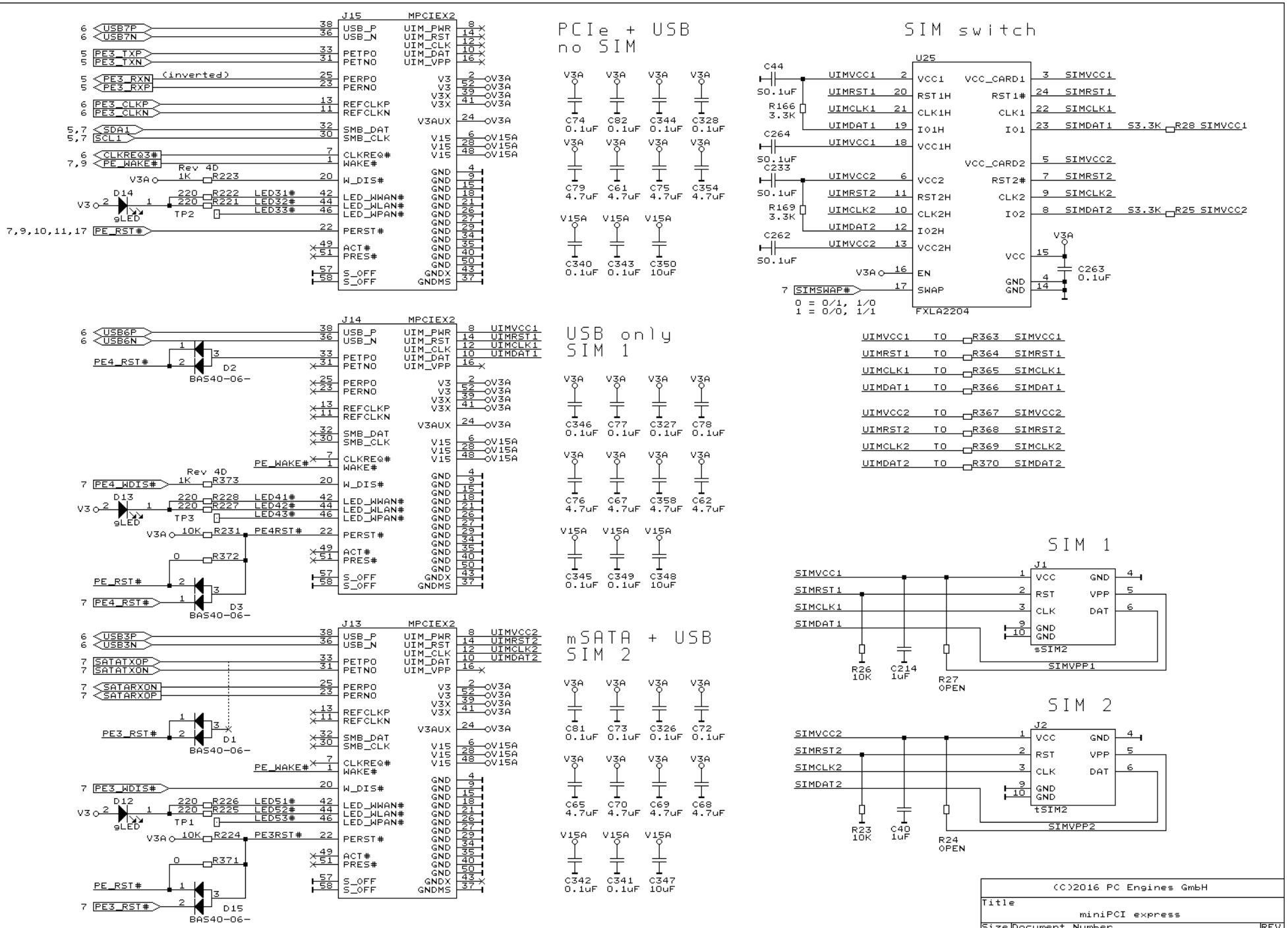
PCIe + USB
no SIM
SIM switch
USB only
SIM 1
mSATA + USB
SIM 2
J15 MPCIEX2
J14 MPCIEX2
J13 MPCIEX2
U25
FXLA2204
J1
sSIM2
J2
tSIM2
Rev 4D
(inverted)
0 = 0/1, 1/0
1 = 0/0, 1/1
Note: Depopulate LED42# / LED52# resistors if necessary
(USIM_DET pin on Huawei modems)
(C)2016 PC Engines GmbH
Title
miniPCI express
Size B
Document Number
APU
REV 4D
Date: May 8, 2019
Sheet 8 of 18

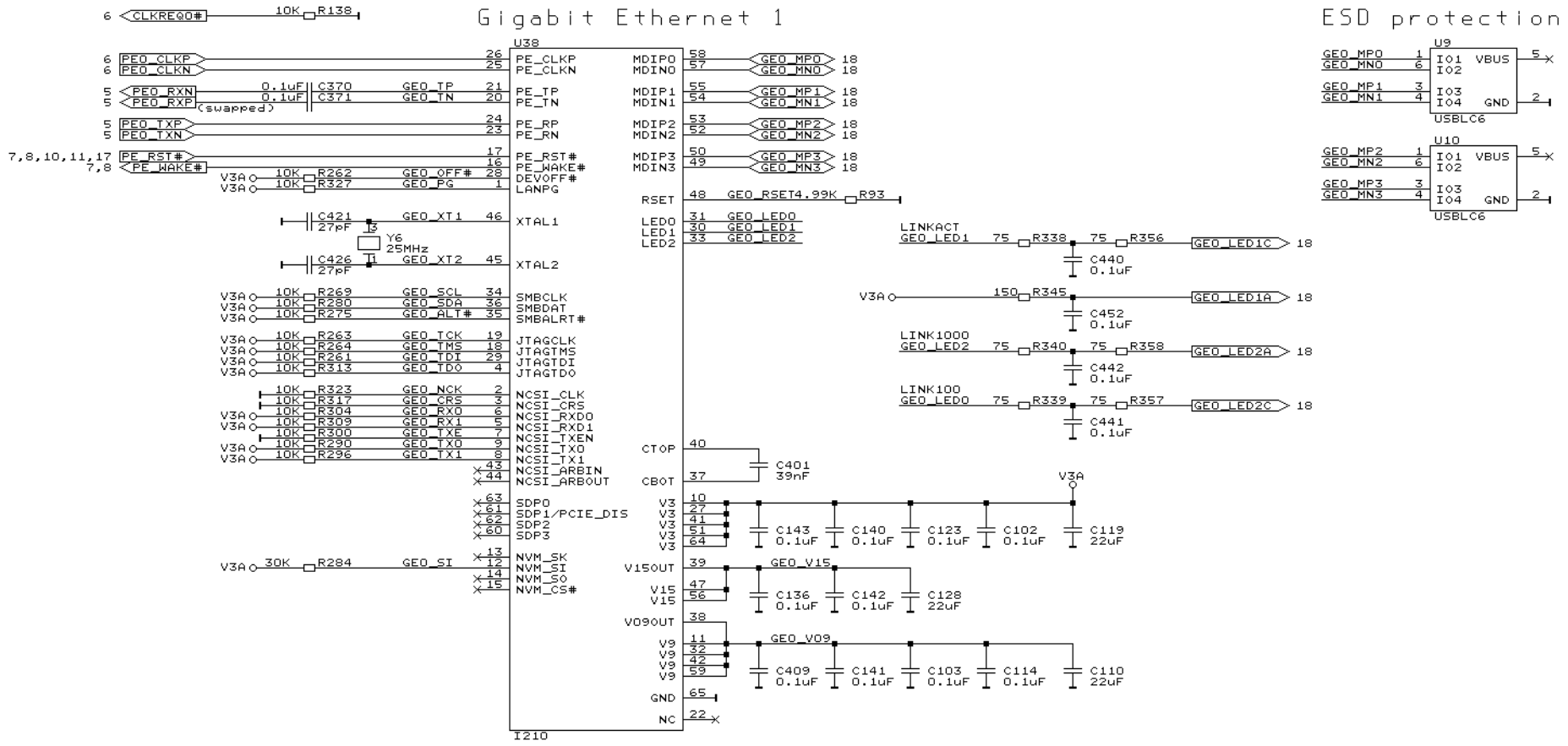

(C)2016 PC Engines GmbH

Title	Ethernet (1)	
Size B	Document Number APU	REV 4D
Date: June 8, 2016	Sheet 9 of 18	

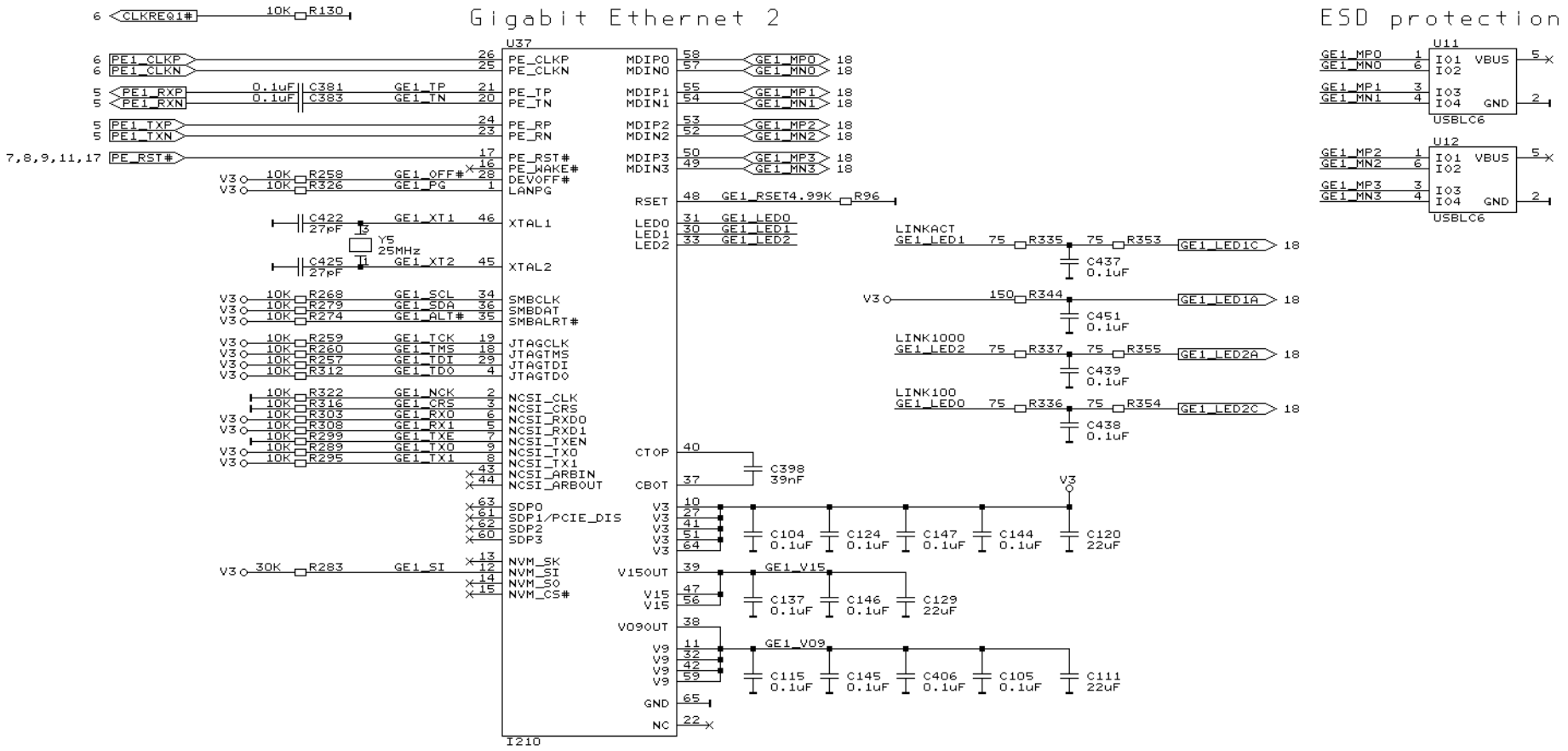

(C)2016 PC Engines GmbH

Title	Ethernet (2)	
Size B	Document Number APU	REV 4D
Date: June 8, 2016	Sheet 10 of 18	

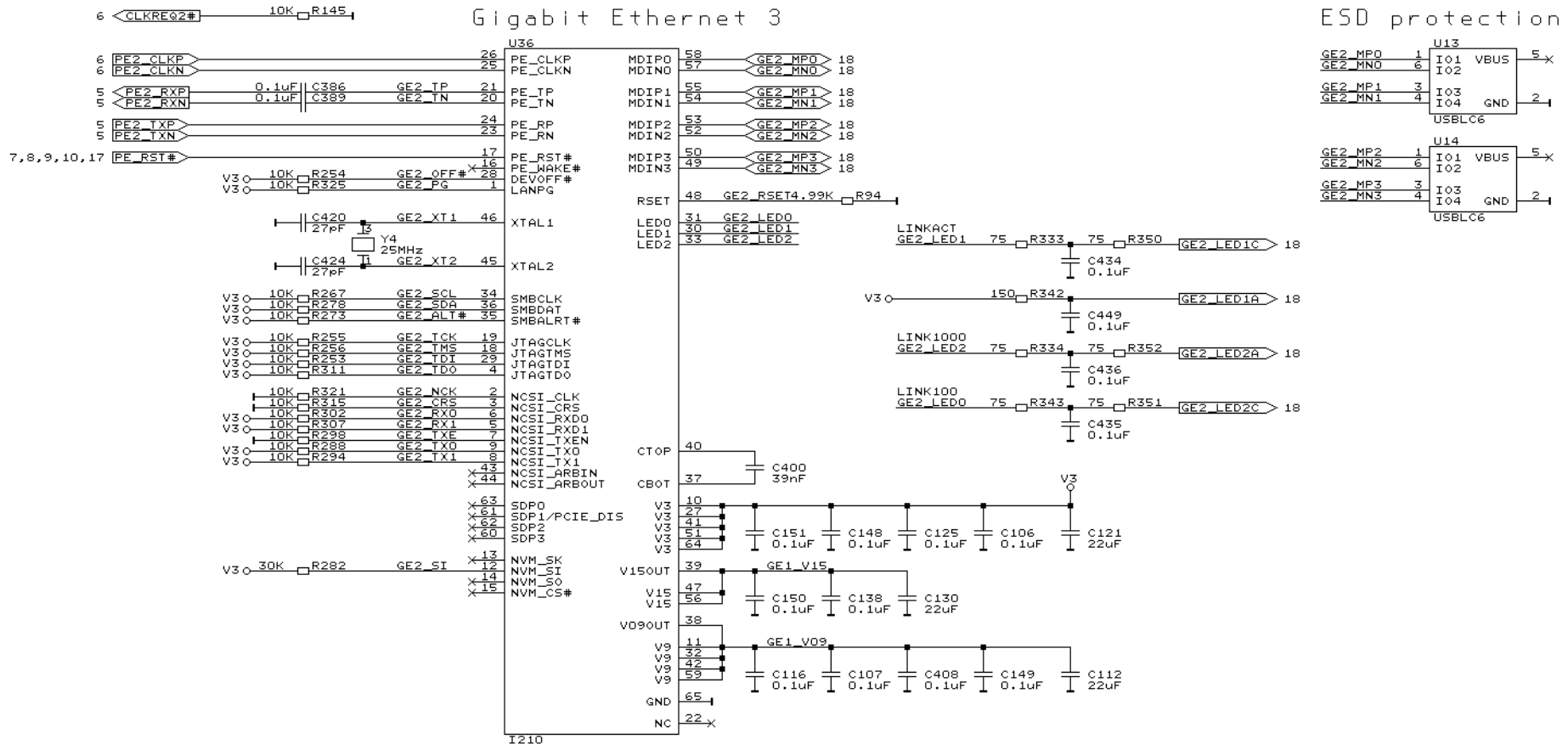

(C)2016 PC Engines GmbH

Title	Ethernet (3)	
Size B	Document Number APU	REV 4D
Date: August 3, 2018	Sheet 11 of 18	

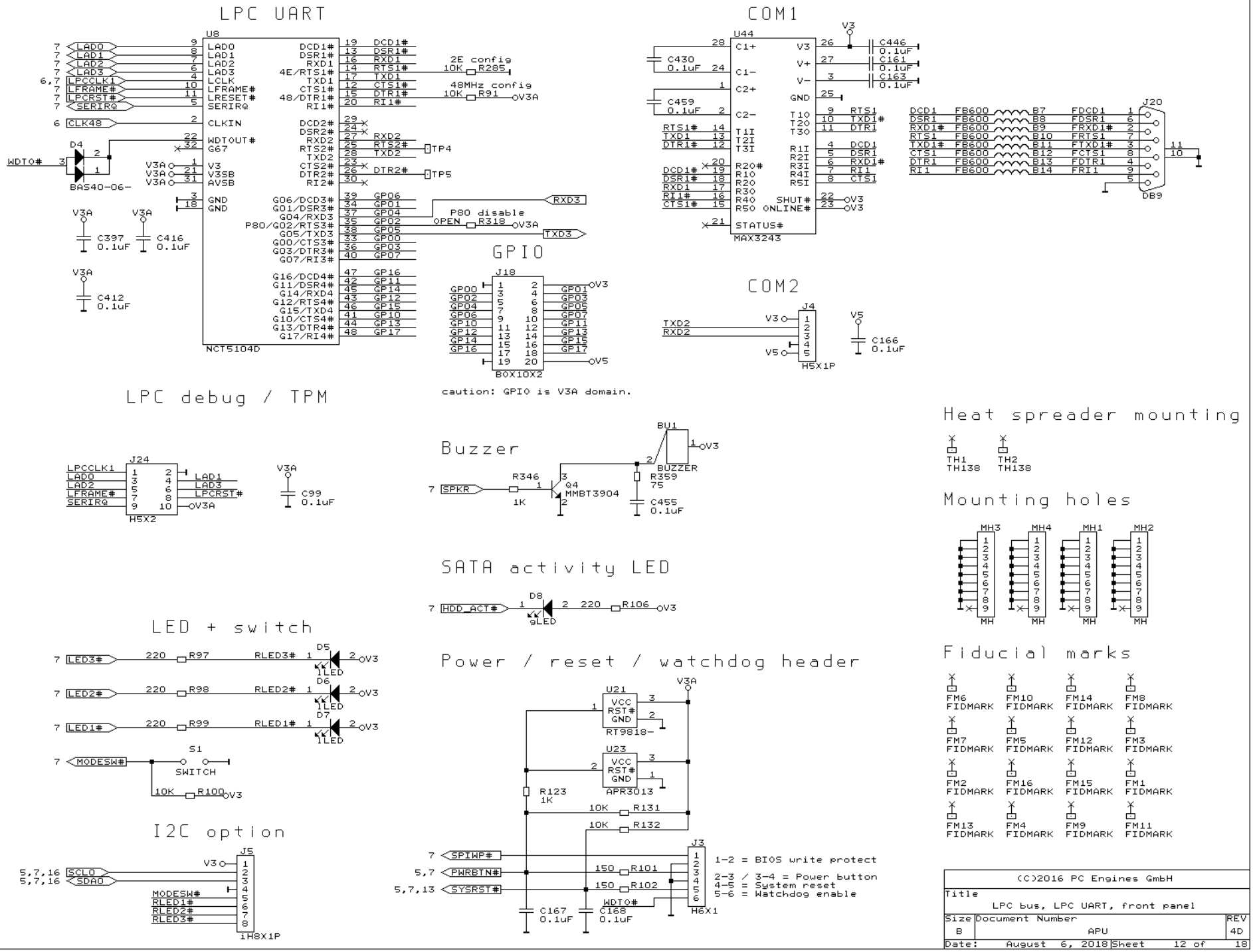
LPC UART
U8
NCT5104D
LAD0
LAD1
LAD2
LAD3
LPCCLK1
LFRAME#
LPCRST#
SERIRQ
CLK48
CLKIN
WDTOUT#
G67
V3
V3SB
AVSB
GND
DCD1#
DSR1#
RXD1
4E/RTS1#
TXD1
CTS1#
48/DTR1#
RI1#
DCD2#
DSR2#
RXD2
RTS2#
TXD2
CTS2#
DTR2#
RI2#
G06/DCD3#
G01/DSR3#
G04/RXD3
P80/G02/RTS3#
G05/TXD3
G00/CTS3#
G03/DTR3#
G07/RI3#
G16/DCD4#
G11/DSR4#
G14/RXD4
G12/RTS4#
G15/TXD4
G10/CTS4#
G13/DTR4#
G17/RI4#
GP16
GP11
GP14
GP12
GP15
GP10
GP13
GP17
GP06
GP01
GP04
GP02
GP05
GP00
GP03
GP07
2E config
10K R285
48MHz config
10K R91
V3A
TP4
TP5
RXD3
TXD3
P80 disable
OPEN R318
D4
BAS40-06-
WDTO#
C397 0.1uF
C416 0.1uF
C412 0.1uF
GPIO
J18
B0X10X2
caution: GPIO is V3A domain.
COM1
U44
MAX3243
C1+
C1-
C2+
C2-
T1I
T2I
T3I
R20#
R1O
R2O
R3O
R4O
R5O
V3
V+
V-
GND
T1O
T2O
T3O
R1I
R2I
R3I
R4I
R5I
SHUT#
ONLINE#
STATUS#
C430 0.1uF
C459 0.1uF
C446 0.1uF
C161 0.1uF
C163 0.1uF
RTS1
TXD1#
DTR1
DCD1
DSR1
RXD1#
RI1
CTS1
FB600
J20
DB9
COM2
J4
H5X1P
TXD2
RXD2
V5
C166 0.1uF
LPC debug / TPM
J24
H5X2
LPCCLK1
LAD0
LAD2
LFRAME#
SERIRQ
LAD1
LAD3
LPCRST#
C99 0.1uF
Buzzer
BU1
BUZZER
SPKR
R346 1K
Q4 MMBT3904
R359 75
C455 0.1uF
SATA activity LED
D8
HDD_ACT#
220 R106
LED
LED + switch
LED3#
LED2#
LED1#
MODESW#
220 R97
220 R98
220 R99
RLED3#
RLED2#
RLED1#
D5
D6
D7
S1
SWITCH
10K R100
I2C option
J5
iH8X1P
SCL0
SDA0
MODESW#
RLED1#
RLED2#
RLED3#
Power / reset / watchdog header
U21
RT9818-
U23
APR3013
VCC
RST#
GND
R123 1K
10K R131
10K R132
SPIWP#
PWRBTN#
SYSRST#
150 R101
150 R102
WDTO#
C167 0.1uF
C168 0.1uF
J3
H6X1
1-2 = BIOS write protect
2-3 / 3-4 = Power button
4-5 = System reset
5-6 = Watchdog enable
Heat spreader mounting
TH1 TH138
TH2 TH138
Mounting holes
MH3
MH4
MH1
MH2
Fiducial marks
FM6 FIDMARK
FM10 FIDMARK
FM14 FIDMARK
FM8 FIDMARK
FM7 FIDMARK
FM5 FIDMARK
FM12 FIDMARK
FM3 FIDMARK
FM2 FIDMARK
FM16 FIDMARK
FM15 FIDMARK
FM1 FIDMARK
FM13 FIDMARK
FM4 FIDMARK
FM9 FIDMARK
FM11 FIDMARK
(C)2016 PC Engines GmbH
Title
LPC bus, LPC UART, front panel
Size B
Document Number
APU
REV 4D
Date: August 6, 2018
Sheet 12 of 18

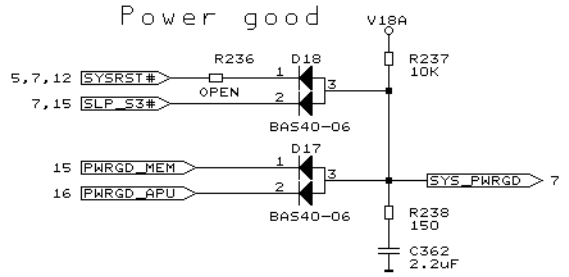

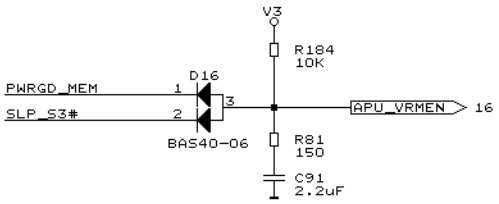

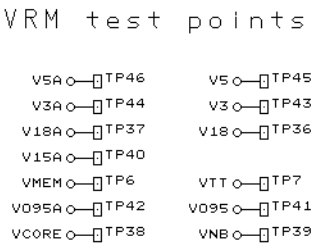

Power sequence:
Turn on after VMEM is good.

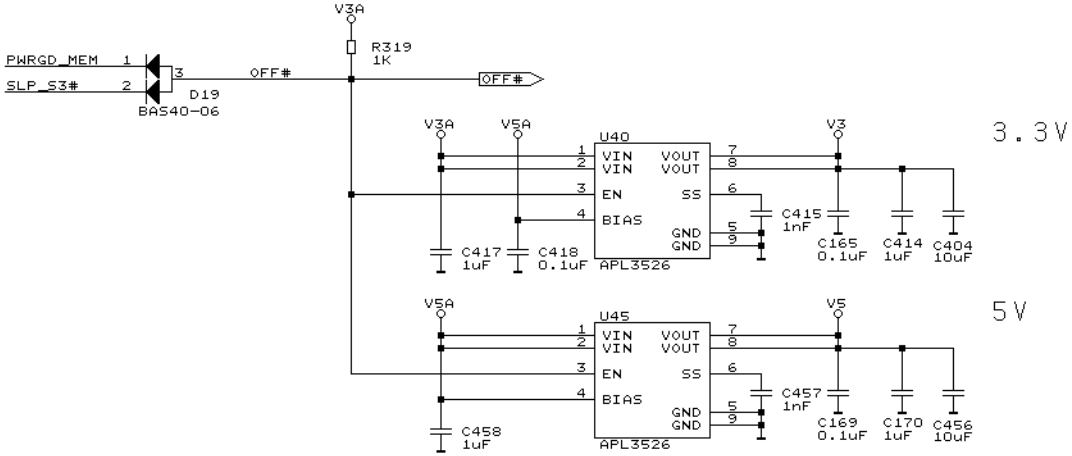

(C)2016 PC Engines GmbH

Title	power good, power switch	
Size B	Document Number APU	REV 4D
Date: December 7, 2016	Sheet 13 of 18	

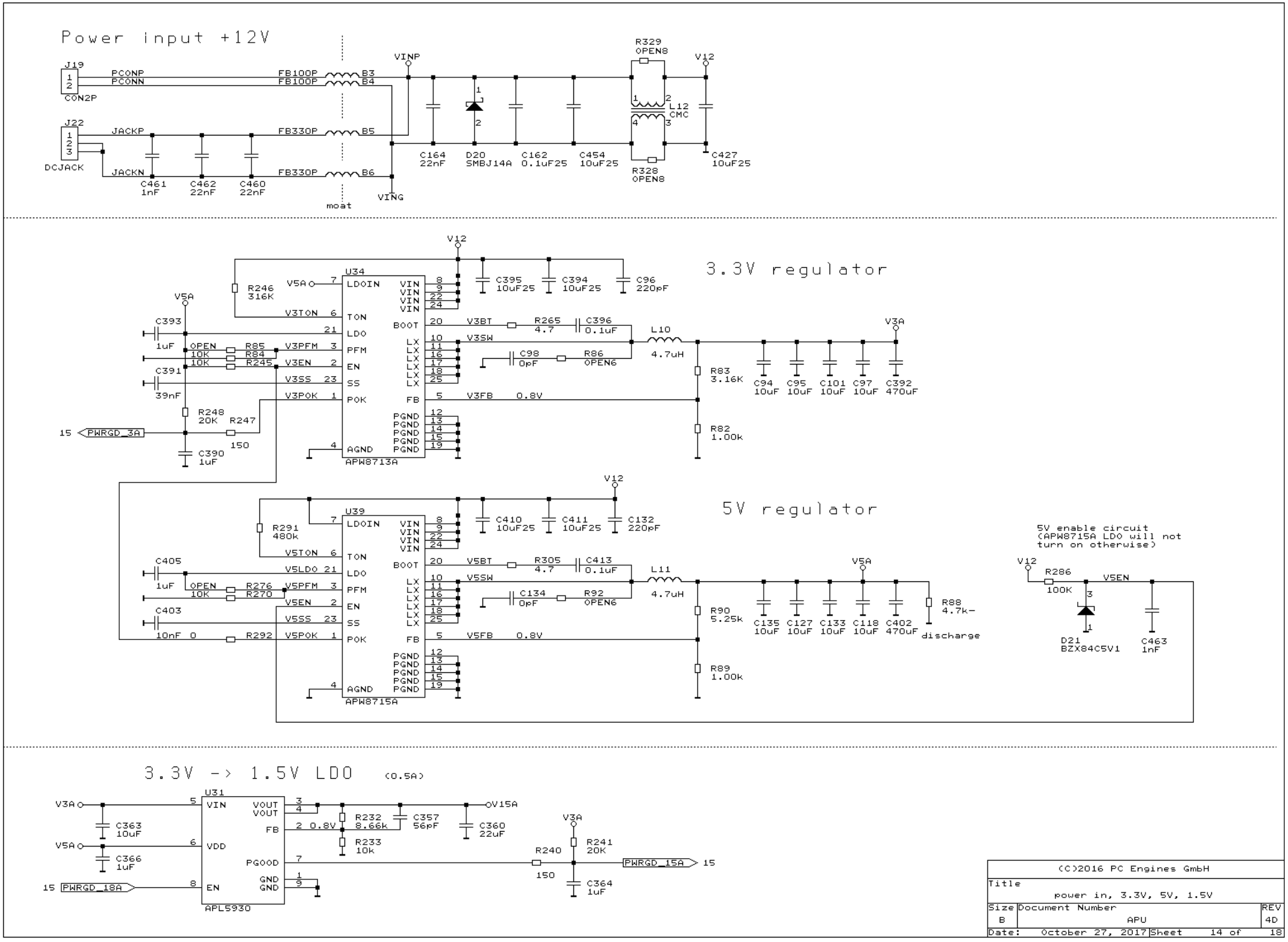

(C)2016 PC Engines GmbH	
Title	power in, 3.3V, 5V, 1.5V
Size B	Document Number APU
REV	4D
Date: October 27, 2017	Sheet 14 of 18

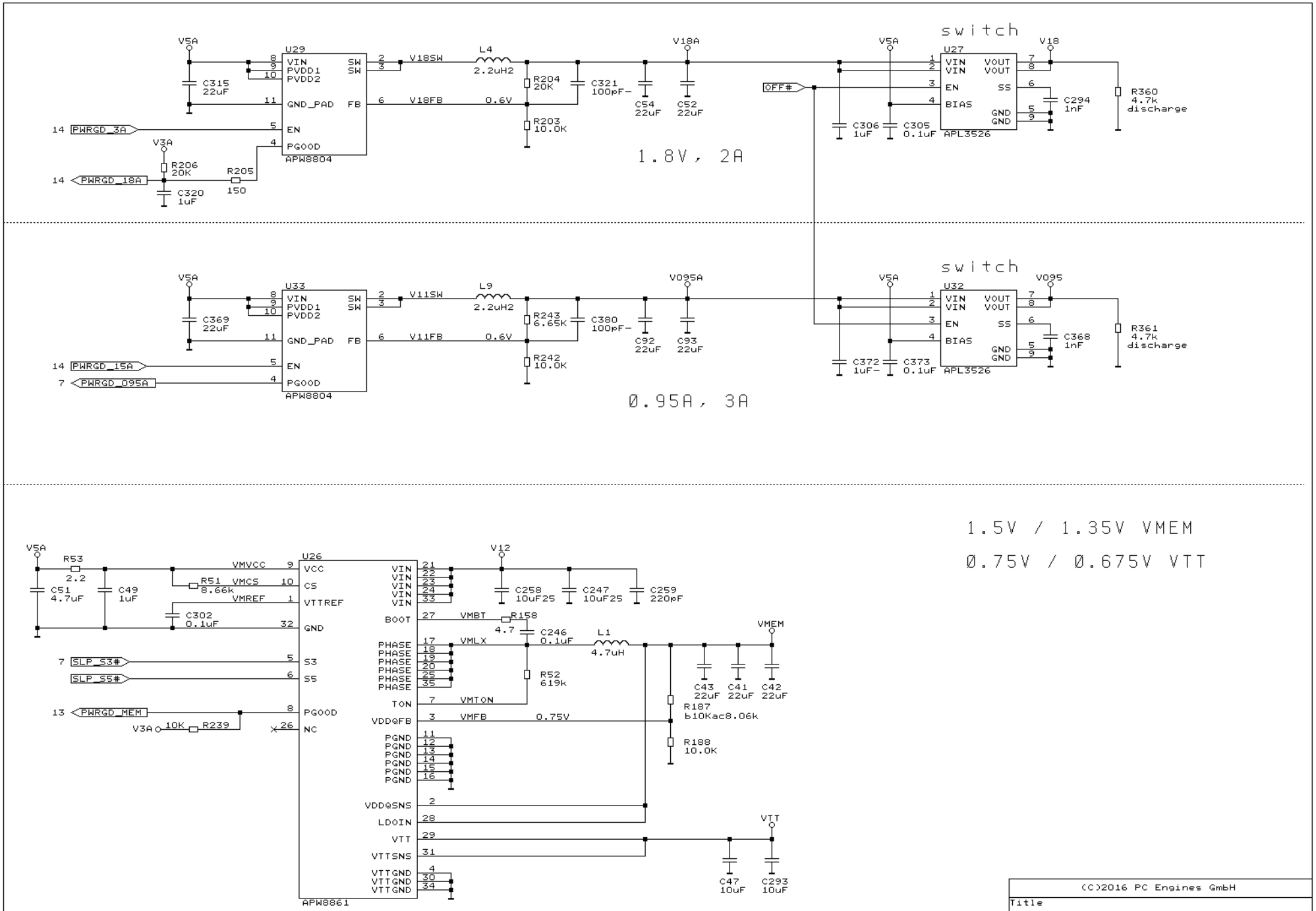

(C)2016 PC Engines GmbH

Title	1.8V, 0.95V, VMEM, VTT	
Size B	Document Number APU	REV 4D
Date: August 6, 2018	Sheet 15 of 18	

VCORE and VNB converter

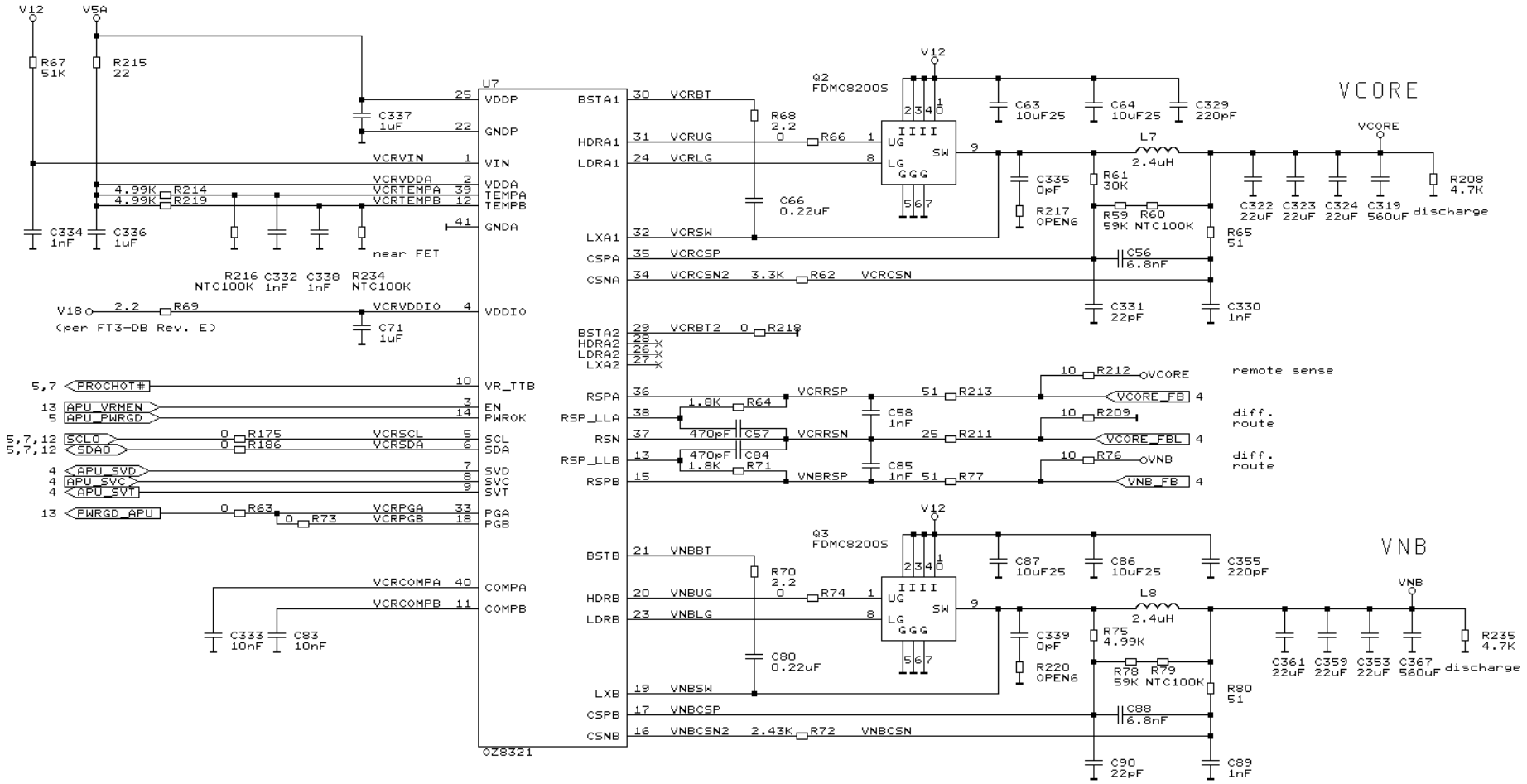

(C)2016 PC Engines GmbH

Title	VCORE, VNB	
Size B	Document Number APU	REV 4D
Date: February 5, 2016	Sheet 16 of 18	

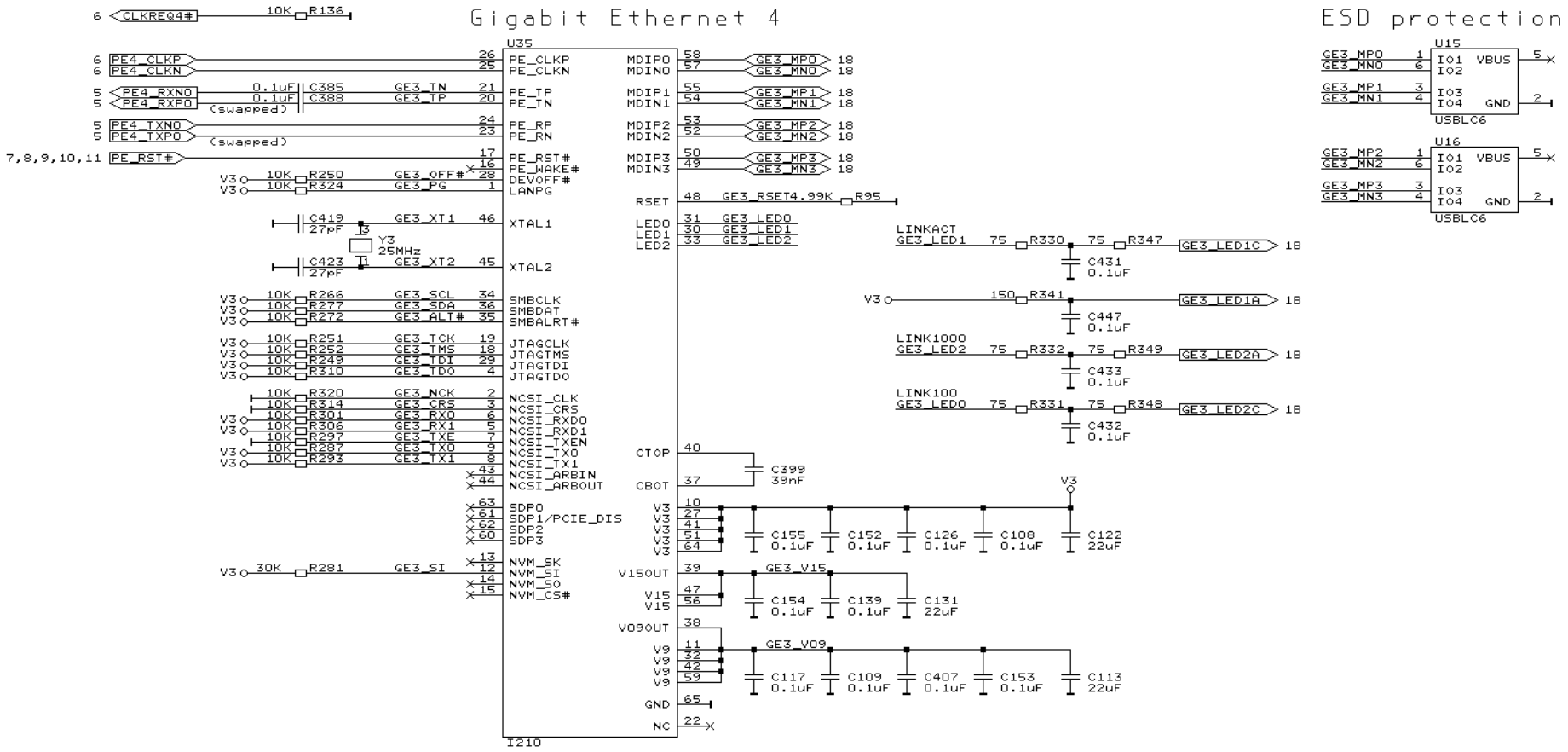

(C)2016 PC Engines GmbH

Title	Ethernet (3)	
Size B	Document Number APU	REV 4D
Date: August 3, 2018	Sheet 17 of 18	

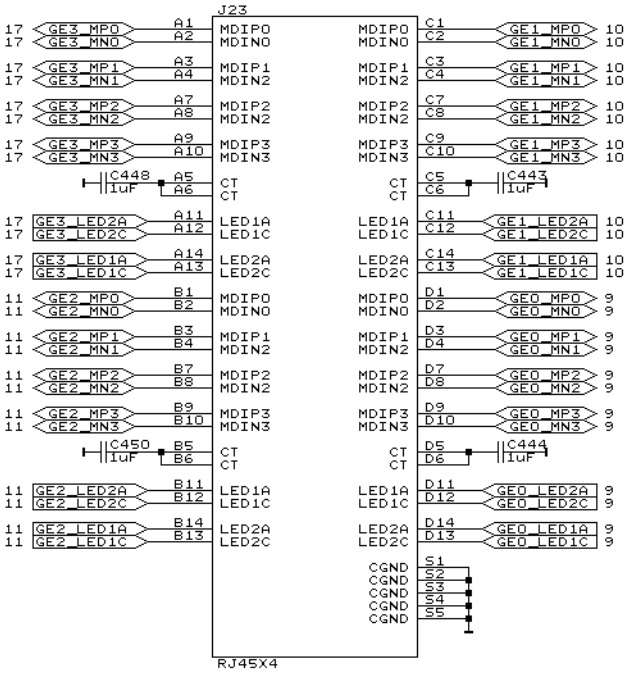

(C)2016 PC Engines GmbH

Title	Ethernet connector	
Size B	Document Number APU	REV 4D
Date: June 7, 2016	Sheet 18 of 18	