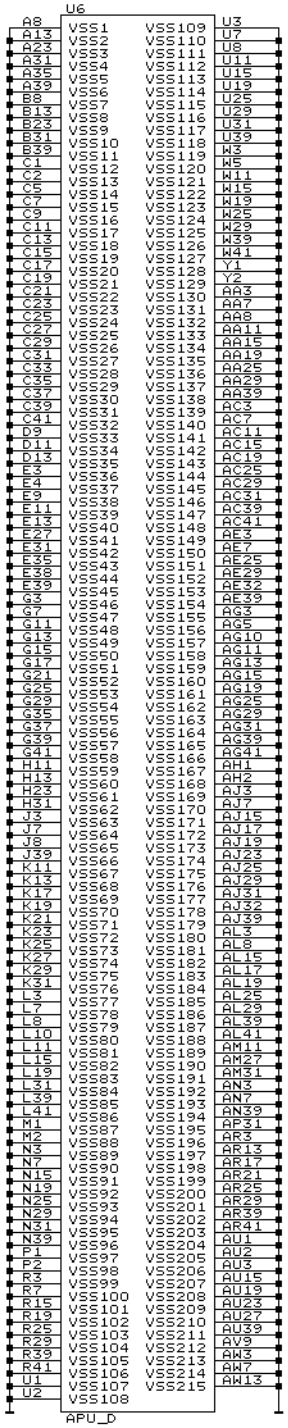

APU ground

DRAM bypass

VMEM	VMEM	VMEM	VMEM	VMEM	VMEM	VMEM	VMEM	VMEM	VMEM
C185 0.22uF	C209 0.22uF	C184 0.22uF	C176 0.22uF	C208 0.22uF	C175 0.22uF	C183 0.22uF	C207 0.22uF	C173 0.22uF	C9 0.22uF
C174 0.22uF									

VMEM	VMEM	VMEM	VMEM	VMEM	VMEM	VMEM	VMEM	VMEM	VMEM
C181 0.22uF	C205 0.22uF	C172 0.22uF	C180 0.22uF	C204 0.22uF	C14 0.22uF	C34 0.22uF	C8 0.22uF	C15 0.22uF	C16 0.22uF
C182 0.22uF									

VMEM	VMEM	VMEM	VMEM	VMEM	VMEM	VMEM	VMEM	VMEM	VMEM
C35 0.22uF	C10 0.22uF	C17 0.22uF	C36 0.22uF	C11 0.22uF	C18 0.22uF	C37 0.22uF	C19 0.22uF	C7 0.22uF	C39 0.22uF
C206 0.22uF									

VMEM	VMEM	VMEM	VMEM	VMEM	VMEM	VMEM	VMEM	VMEM	VMEM
C177 0.22uF	C38 0.22uF	C12 0.22uF	C194 0.22uF	C192 0.22uF	C195 0.22uF	C3 10uF	C2 10uF	C6 10uF	C5 10uF
C4 10uF									

VTT	VTT	VTT	VTT	VTT	VTT
C13 0.22uF	C178 0.22uF	C20 0.22uF	C21 0.22uF	C27 0.22uF	C197 0.22uF

VTT	VTT	VTT	VTT	VTT	VTT
C171 0.22uF	C179 0.22uF	C28 0.22uF	C1 0.22uF	C186 0.22uF	C193 0.22uF

MVREF	MVREF	MVREF	MVREF	MVREF	MVREF	MVREF	MVREF	MVREF	MVREF
C202 0.1uF	C201 0.1uF	C30 0.1uF	C31 0.1uF	C32 0.1uF	C29 0.1uF	C198 0.1uF	C24 0.1uF	C26 0.1uF	C189 0.1uF

MVREF	MVREF	MVREF	MVREF	MVREF	MVREF	MVREF	MVREF	MVREF	MVREF
C22 0.1uF	C191 0.1uF	C190 0.1uF	C188 0.1uF	C187 0.1uF	C23 0.1uF	C200 0.1uF	C25 0.1uF	C33 0.1uF	C199 0.1uF

```
!LINK
!2.SCH
!3.SCH
!4.SCH
!5.SCH
!6.SCH
!7.SCH
!8.SCH
!9.SCH
!10.SCH
!11.SCH
!12.SCH
!13.SCH
!14.SCH
!15.SCH
!16.SCH
!17.SCH
!18.SCH
```

(C)2016 PC Engines GmbH

Title	Ground, DRAM bypass	
Size B	Document Number APU	REV 4B
Date: June 8, 2016	Sheet 1 of 18	

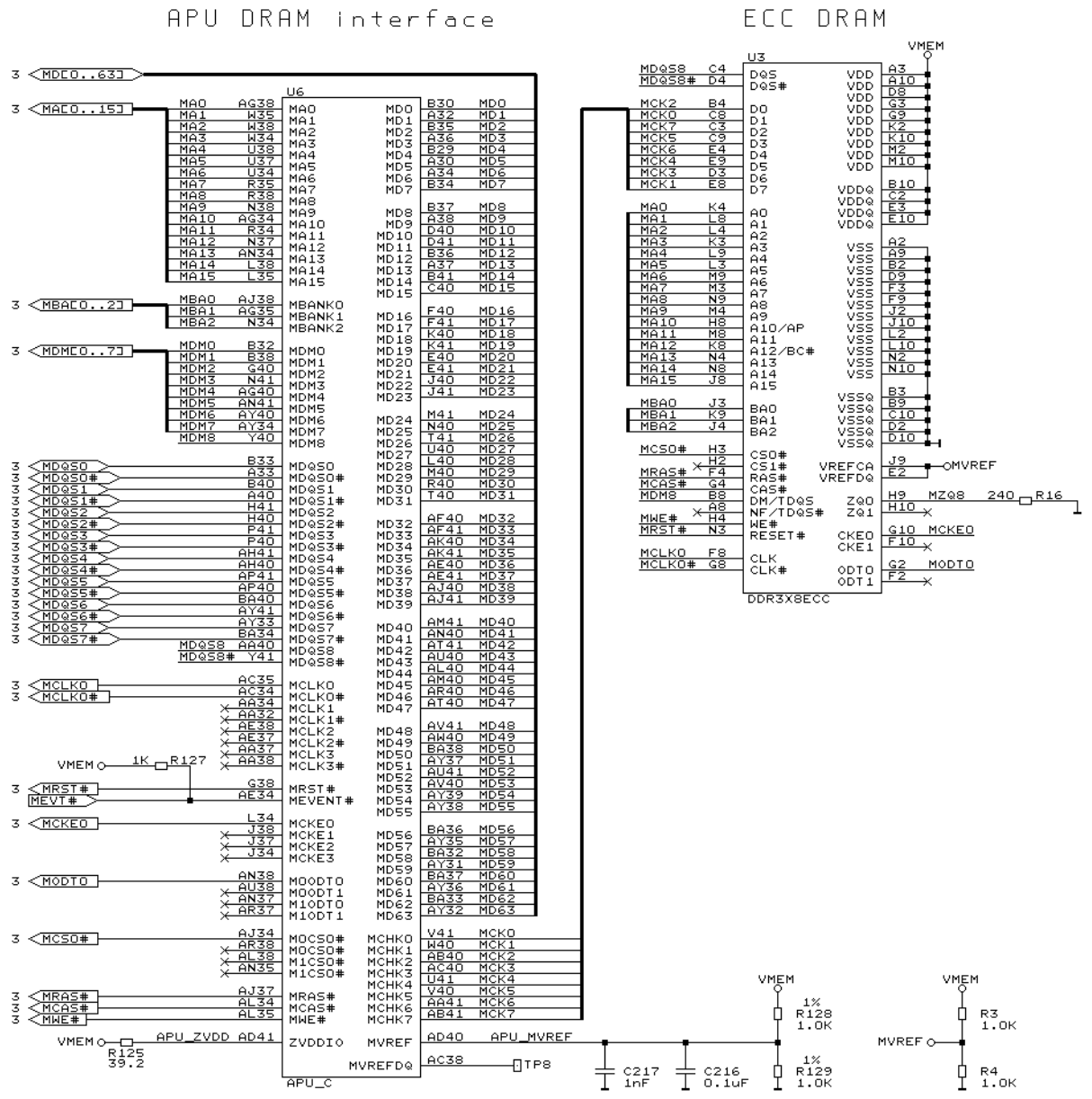

(C)2016 PC Engines GmbH

Title	DRAM interface / power
Size B	Document Number APU
REV	4B
Date: February 5, 2016	Sheet 2 of 18

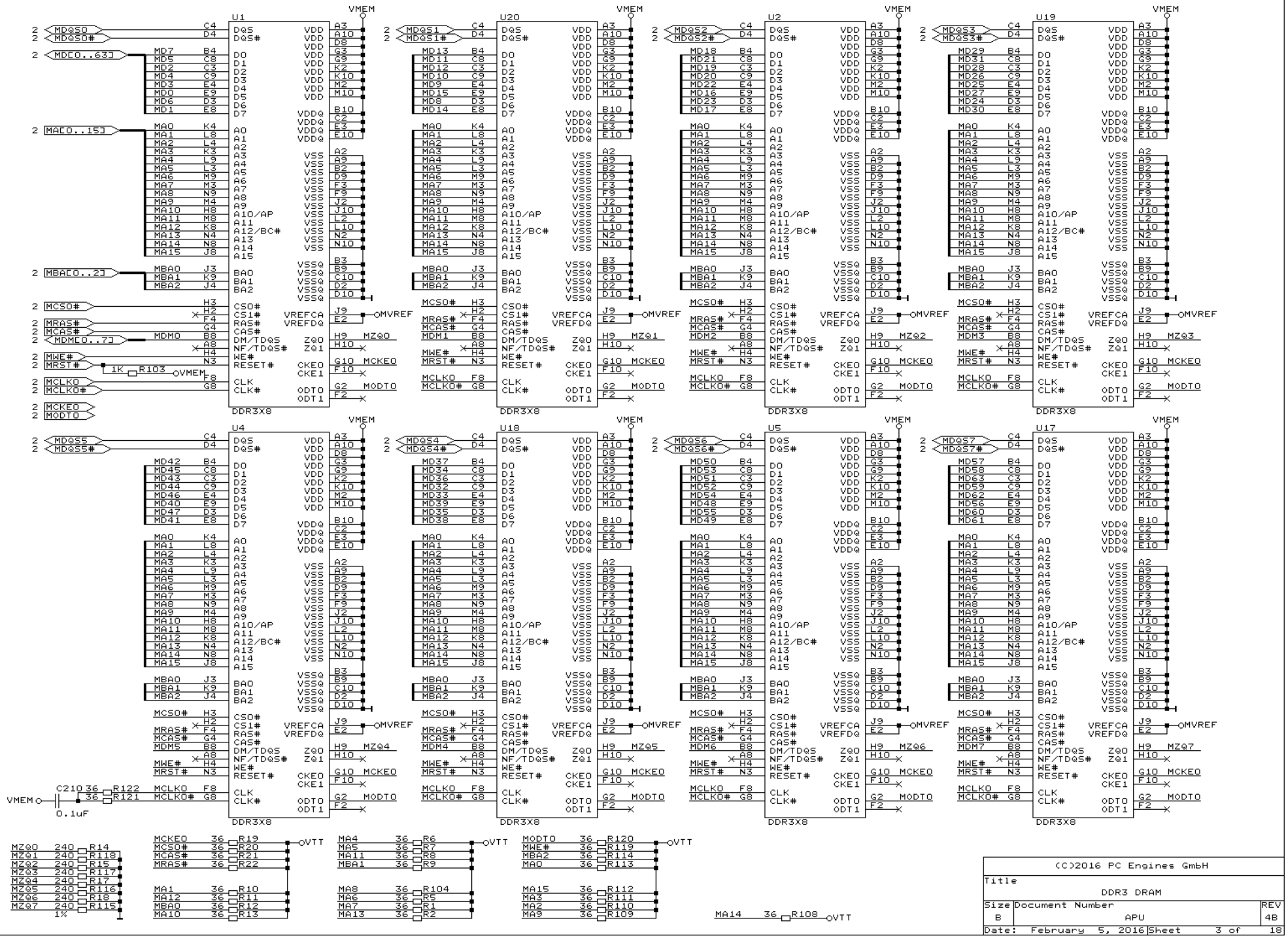

(C)2016 PC Engines GmbH

Title: DDR3 DRAM

Size	Document Number	REV
B	APU	4B

Date: February 5, 2016 Sheet 3 of 18

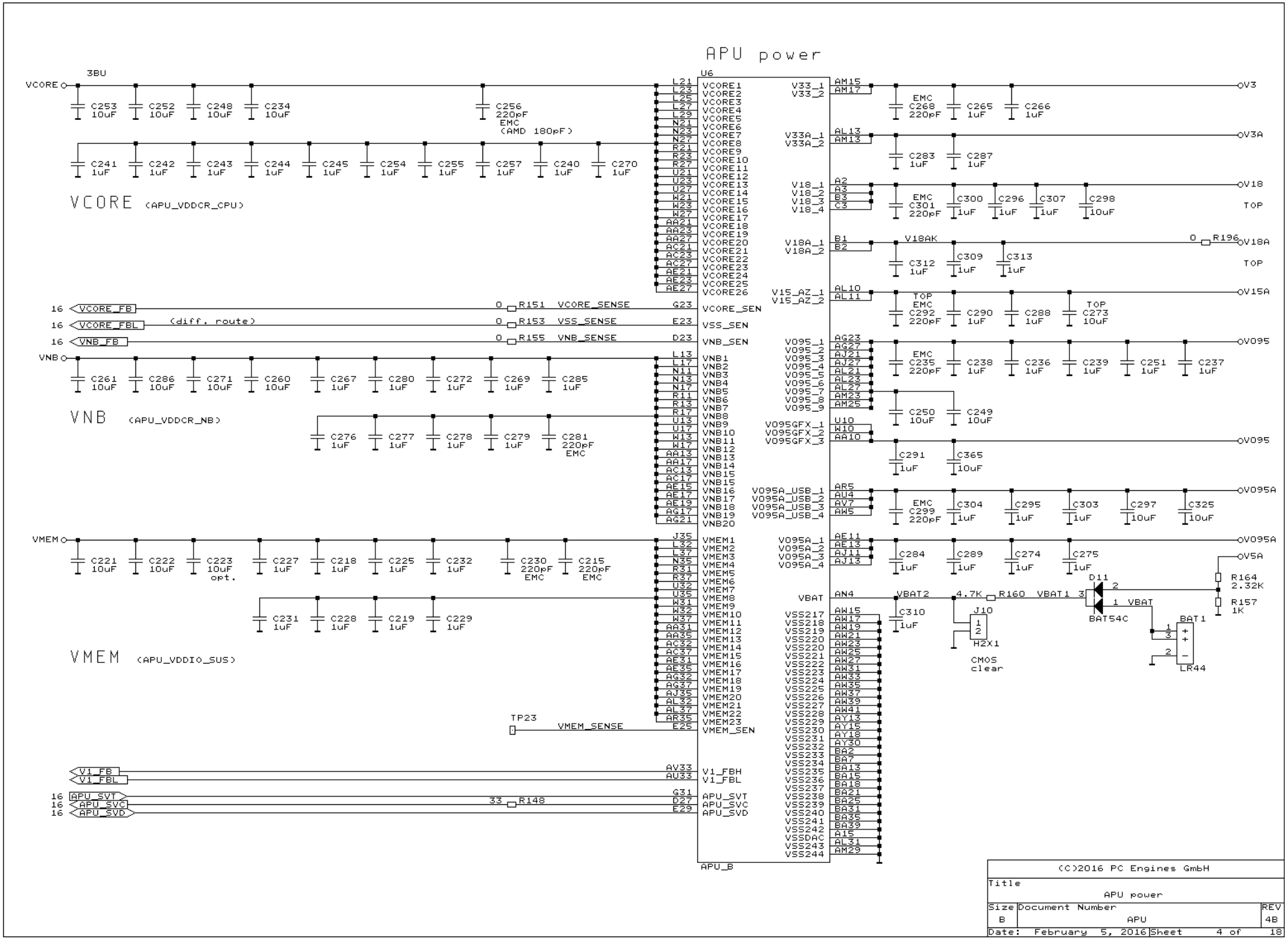

(C)2016 PC Engines GmbH

Title	APU power	
Size B	Document Number APU	REV 4B
Date: February 5, 2016	Sheet 4 of 18	

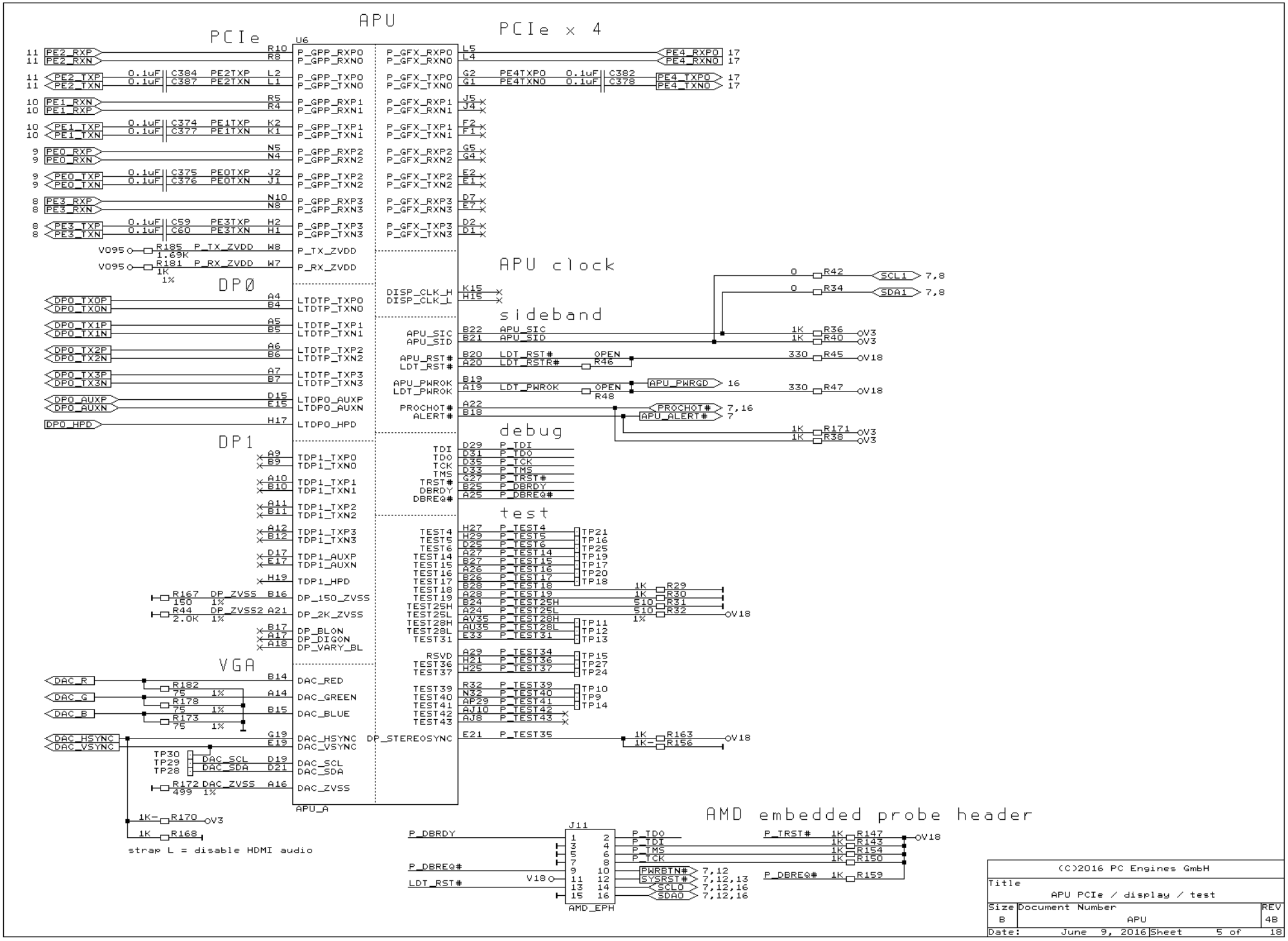
APU
PCIe
PCIe x 4
U6
APU_A
DP0
DP1
VGA
APU clock
sideband
debug
test
AMD embedded probe header
J11
AMD_EPH
strap L = disable HDMI audio
(C)2016 PC Engines GmbH
Title
APU PCIe / display / test
Size B
Document Number
APU
REV 4B
Date: June 9, 2016
Sheet 5 of 18

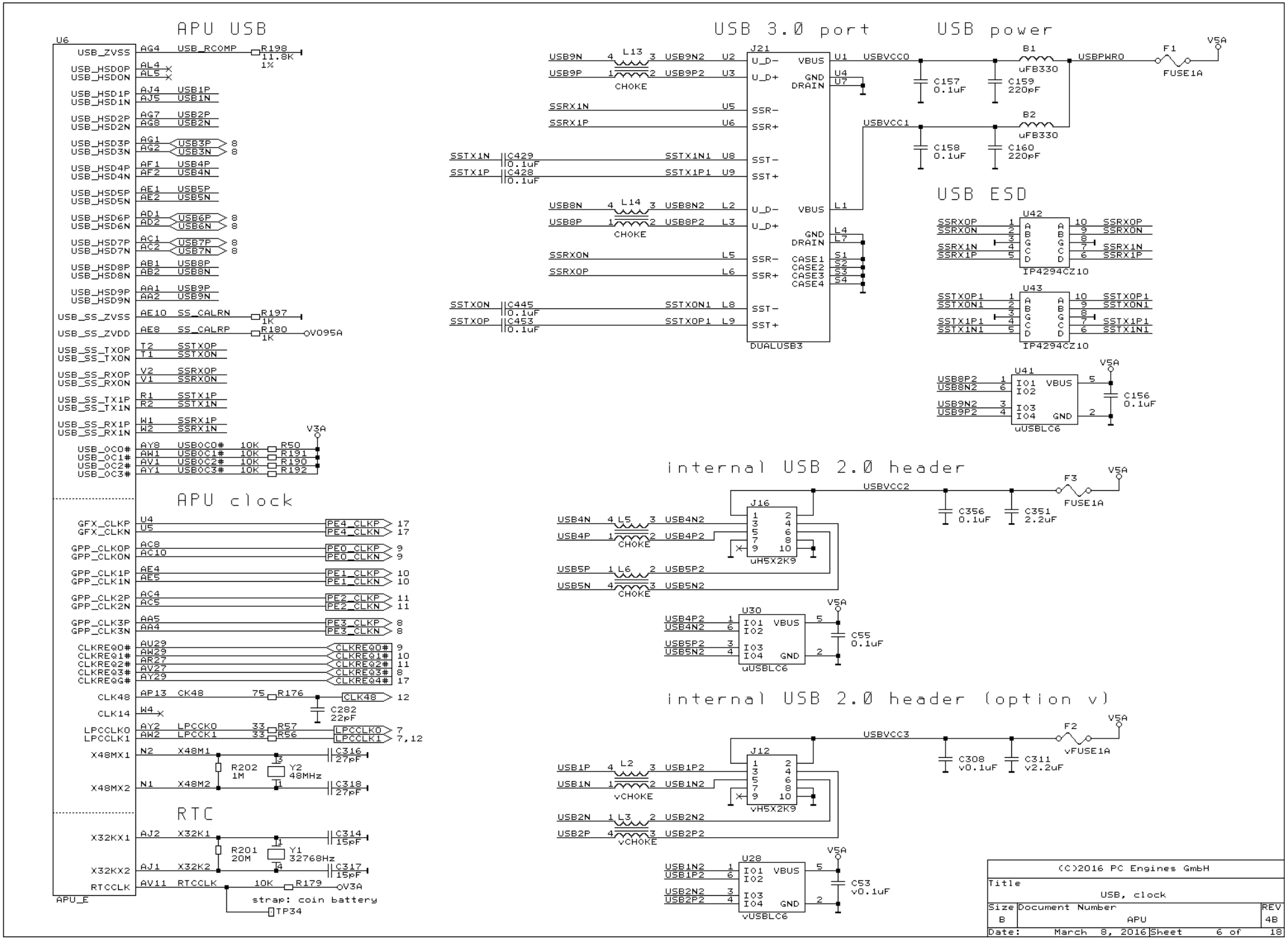
APU USB
USB 3.0 port
USB power
USB ESD
internal USB 2.0 header
internal USB 2.0 header (option v)
APU clock
RTC
U6
APU_E
J21
DUALUSB3
U42
IP4294CZ10
U43
IP4294CZ10
U41
uUSBLC6
J16
uH5X2K9
U30
uUSBLC6
J12
vH5X2K9
U28
vUSBLC6
USB_RCOMP
R198
11.8K
1%
SS_CALRN
R197
1K
SS_CALRP
R180
1K
V095A
V3A
V5A
USB_0C0#
USB_0C1#
USB_0C2#
USB_0C3#
R50
R191
R190
R192
10K
PE4_CLKP
PE4_CLKN
PE0_CLKP
PE0_CLKN
PE1_CLKP
PE1_CLKN
PE2_CLKP
PE2_CLKN
PE3_CLKP
PE3_CLKN
CLKREQ0#
CLKREQ1#
CLKREQ2#
CLKREQ3#
CLKREQ4#
CLK48
R176
C282
22pF
LPCCLK0
LPCCLK1
R57
R56
X48MX1
X48MX2
R202
1M
Y2
48MHz
C316
27pF
C318
27pF
X32KX1
X32KX2
R201
20M
Y1
32768Hz
C314
15pF
C317
15pF
RTCCLK
R179
strap: coin battery
TP34
L13
L14
CHOKE
C429
C428
C445
C453
0.1uF
USBVCC0
USBVCC1
USBPWR0
B1
B2
uFB330
C157
C158
C159
C160
220pF
F1
FUSE1A
C156
USBVCC2
F3
C356
C351
2.2uF
C55
USBVCC3
F2
vFUSE1A
C308
v0.1uF
C311
v2.2uF
C53
v0.1uF
vCHOKE
(C)2016 PC Engines GmbH
Title
USB, clock
Size
B
Document Number
APU
REV
4B
Date:
March 8, 2016
Sheet
6 of
18

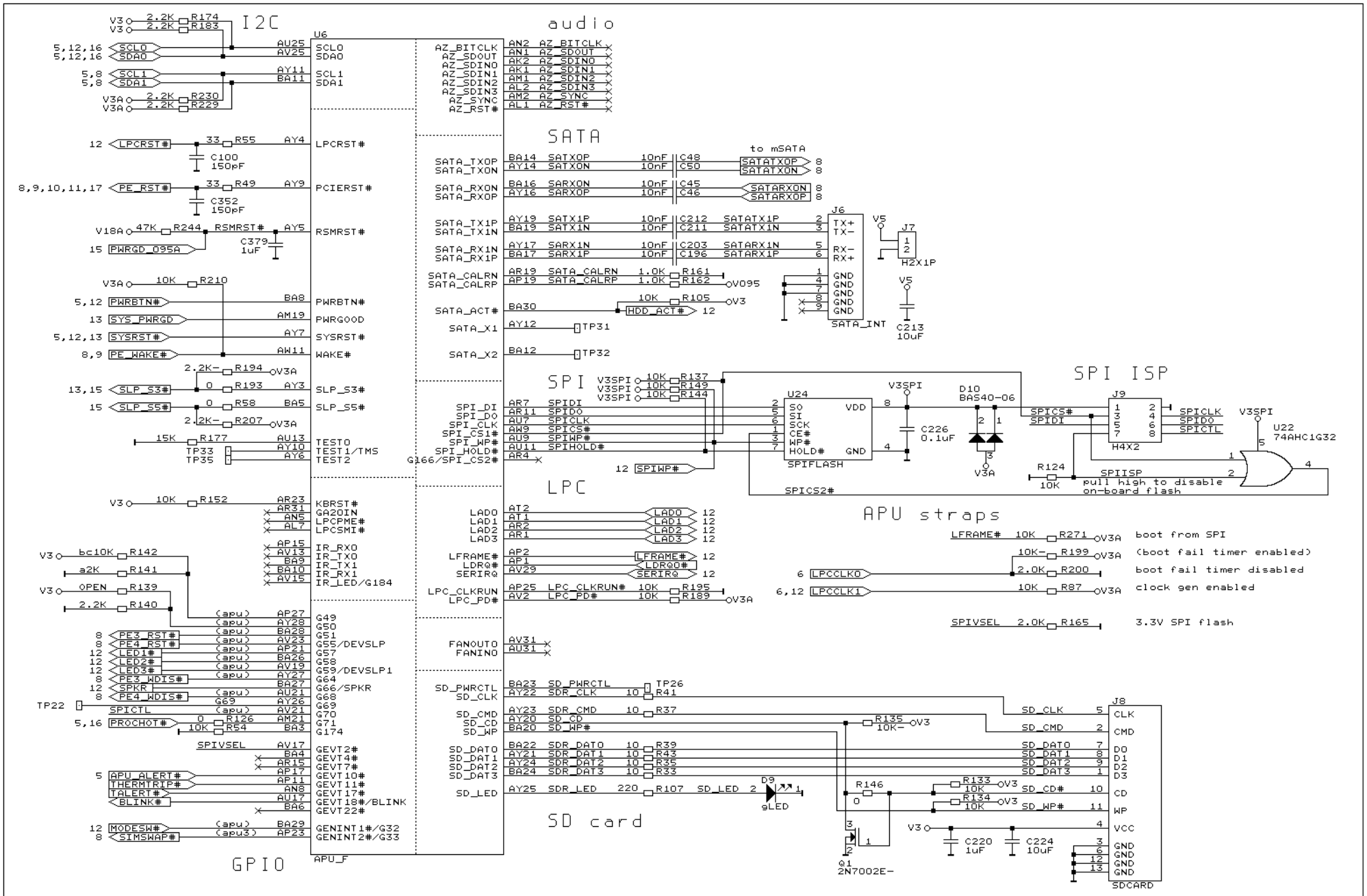

(C)2016 PC Engines GmbH

Title	SATA, LPC, SPI
Size B	Document Number APU REV 4B
Date: January 12, 2017	Sheet 7 of 18

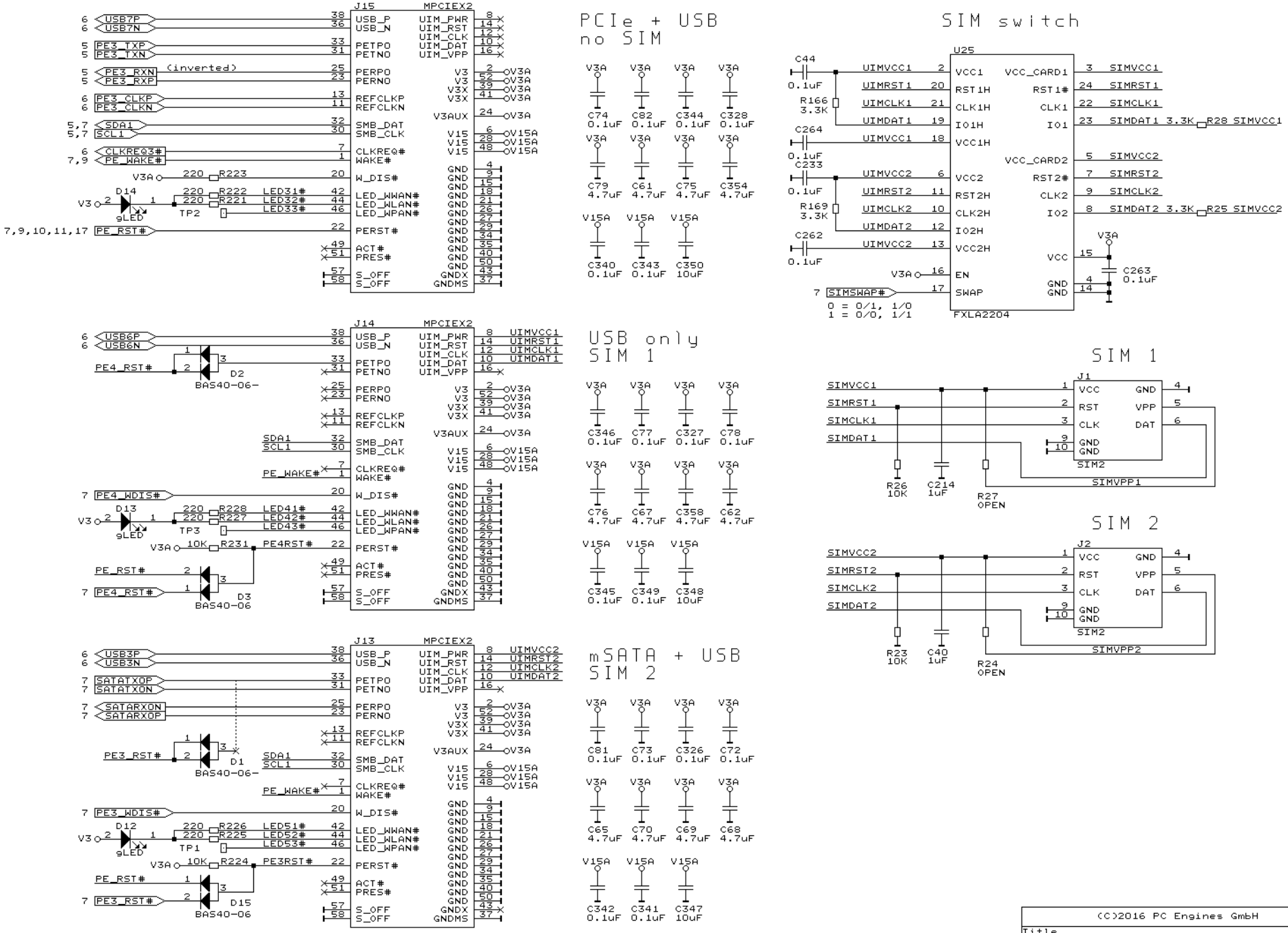

(C)2016 PC Engines GmbH

Title	miniPCI express	
Size B	Document Number APU	REV 4B
Date: March 4, 2016	Sheet 8 of 18	

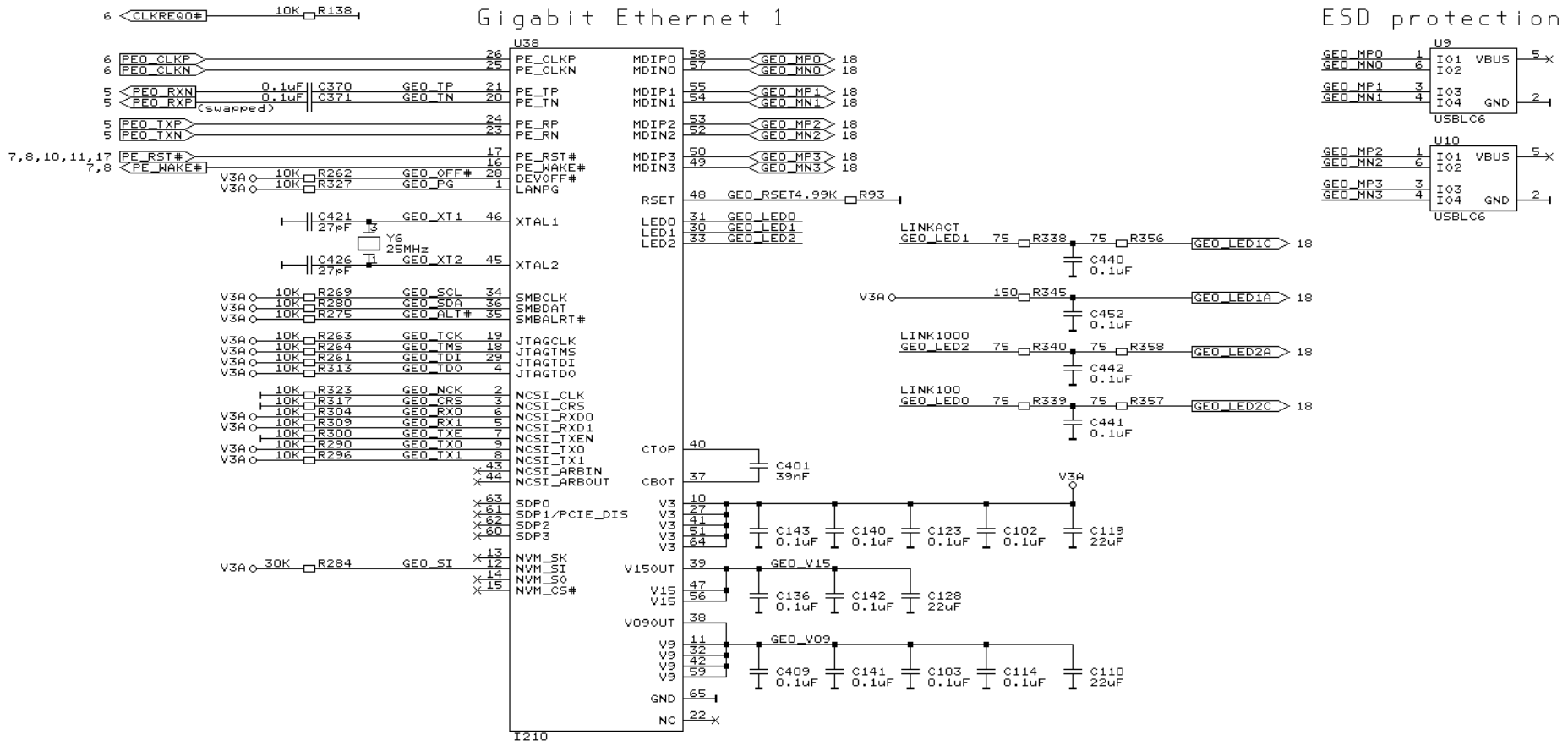

(C)2016 PC Engines GmbH

Title	Ethernet (1)	
Size B	Document Number APU	REV 4B
Date: June 8, 2016	Sheet 9 of 18	

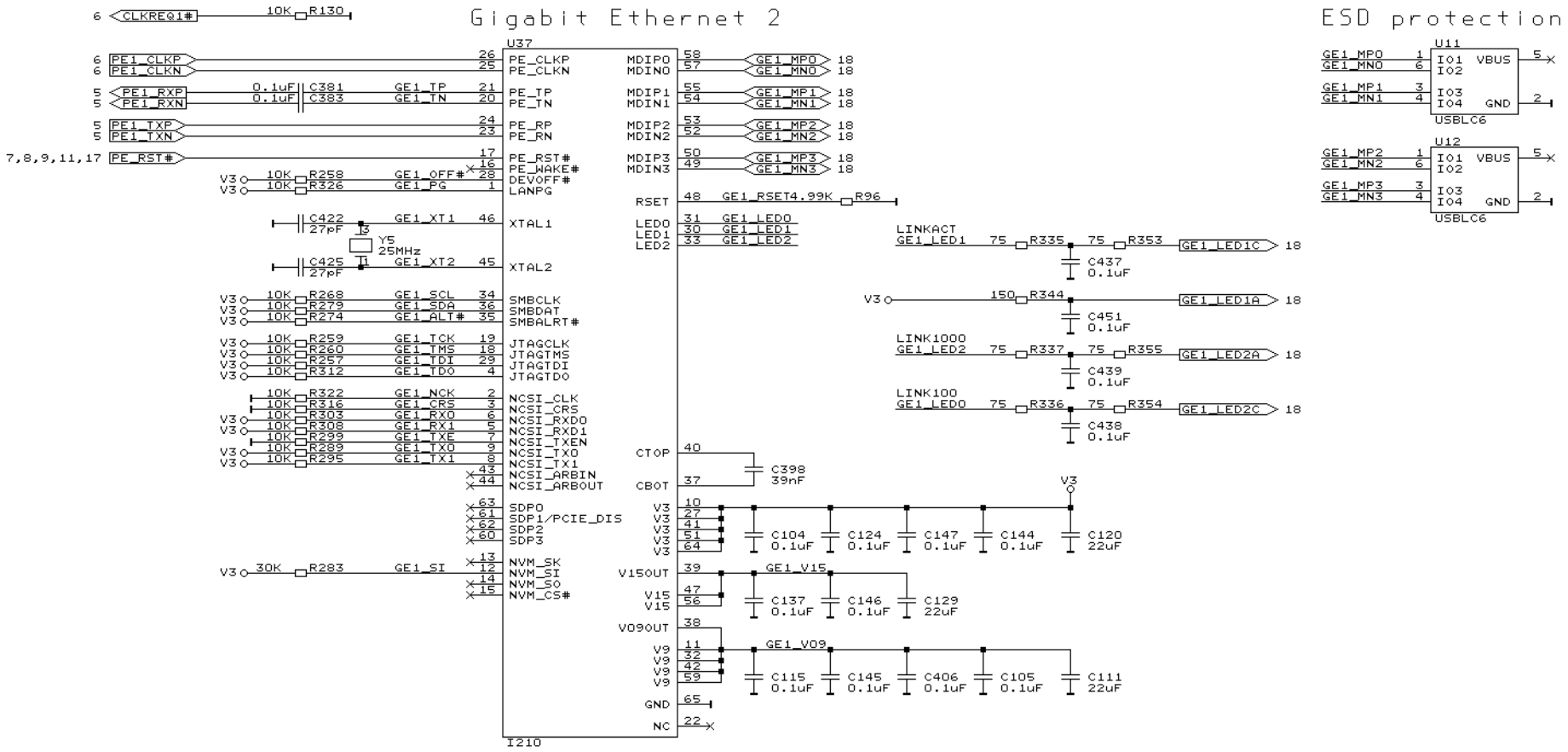

(C)2016 PC Engines GmbH

Title	Ethernet (2)	
Size B	Document Number APU	REV 4B
Date: June 8, 2016	Sheet 10 of 18	

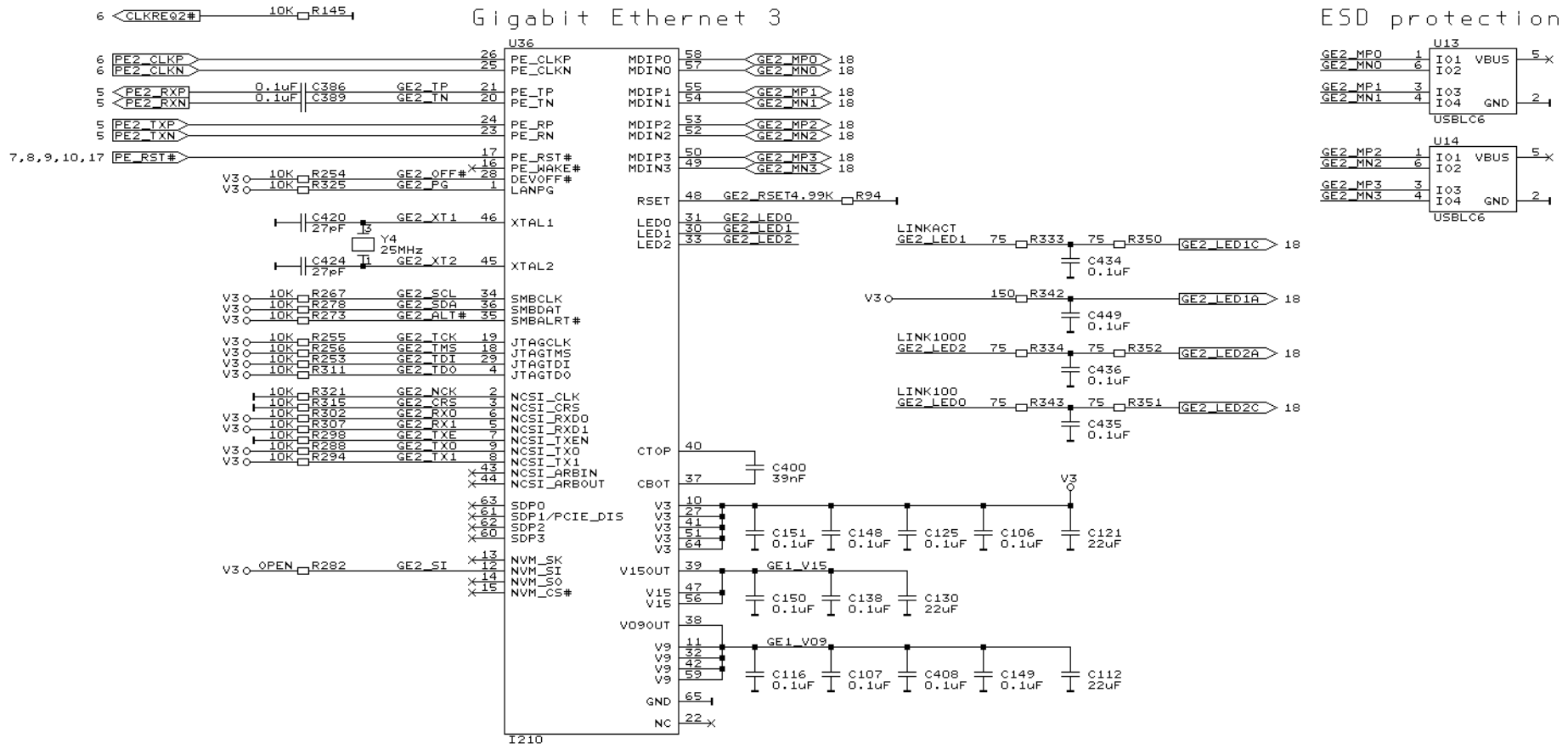

(C)2016 PC Engines GmbH		
Title	Ethernet (3)	
Size B	Document Number APU	REV 4B
Date: June 8, 2016	Sheet 11 of 18	

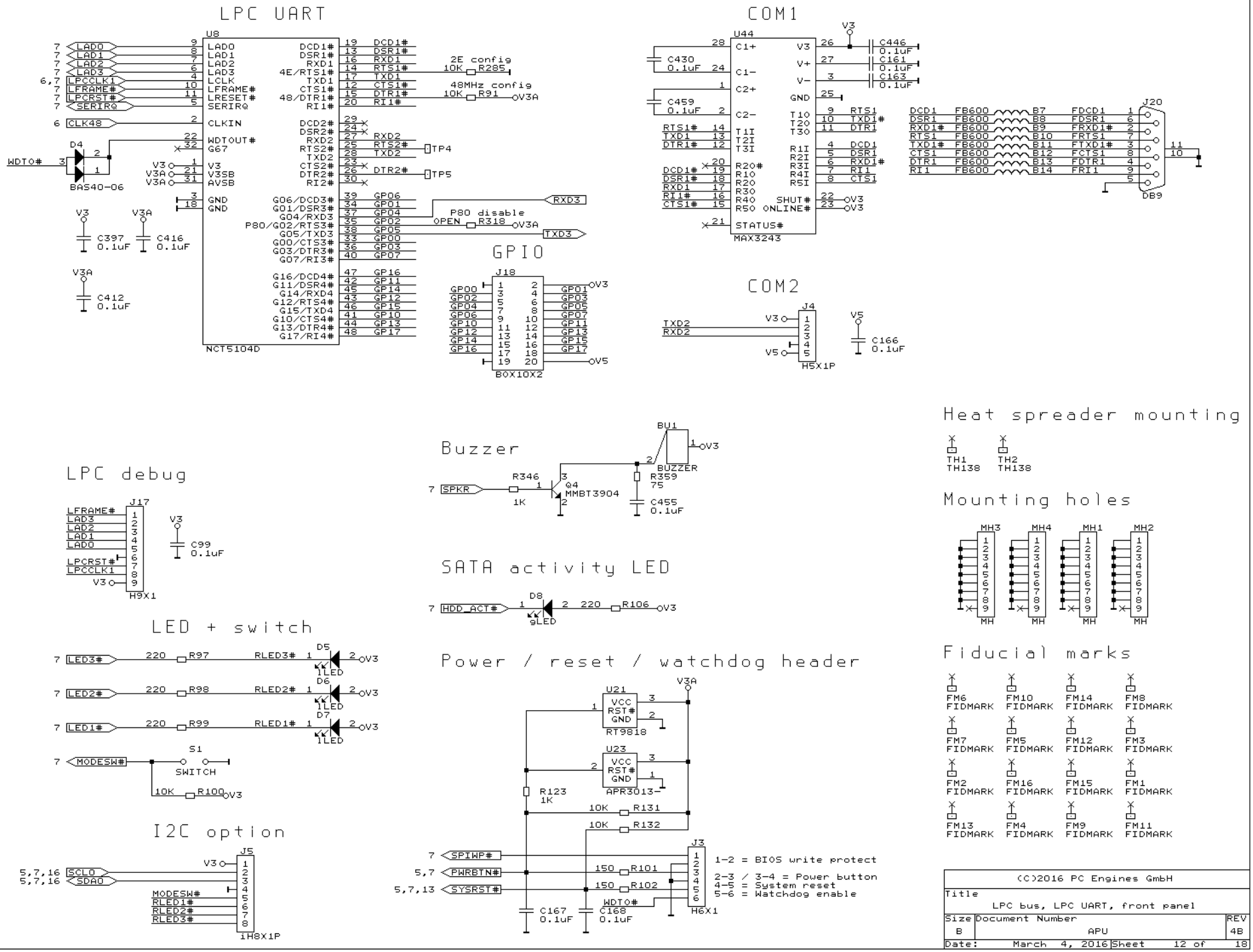
LPC UART
U8
NCT5104D
LAD0
LAD1
LAD2
LAD3
LPCCLK1
LFRAME#
LPCRST#
SERIRQ
CLK48
WDTOUT#
G67
V3
V3SB
AVSB
GND
DCD1#
DSR1#
RXD1
4E/RTS1#
TXD1
CTS1#
48/DTR1#
RI1#
DCD2#
DSR2#
RXD2
RTS2#
TXD2
CTS2#
DTR2#
RI2#
G06/DCD3#
G01/DSR3#
G04/RXD3
P80/G02/RTS3#
G05/TXD3
G00/CTS3#
G03/DTR3#
G07/RI3#
G16/DCD4#
G11/DSR4#
G14/RXD4
G12/RTS4#
G15/TXD4
G10/CTS4#
G13/DTR4#
G17/RI4#
GP06
GP01
GP04
GP02
GP05
GP00
GP03
GP07
GP16
GP11
GP14
GP12
GP15
GP10
GP13
GP17
2E config
10K R285
48MHz config
10K R91
V3A
TP4
TP5
RXD3
TXD3
P80 disable
OPEN R318
D4
BAS40-06
WDTO#
C397 0.1uF
C416 0.1uF
C412 0.1uF
COM1
U44
MAX3243
C1+
C1-
C2+
C2-
T1I
T2I
T3I
R20#
R1O
R2O
R3O
R4O
R5O
V3
V+
V-
GND
T1O
T2O
T3O
R1I
R2I
R3I
R4I
R5I
SHUT#
ONLINE#
STATUS#
C430 0.1uF
C459 0.1uF
C446 0.1uF
C161 0.1uF
C163 0.1uF
RTS1
TXD1#
DTR1
DCD1
DSR1
RXD1#
RI1
CTS1
J20
DB9
FB600
B7
B8
B9
B10
B11
B12
B13
B14
FDCD1
FDSR1
FRXD1#
FRTS1
FTXD1#
FCTS1
FDTR1
FRI1
GPIO
J18
B0X10X2
COM2
J4
H5X1P
TXD2
RXD2
V5
C166 0.1uF
Heat spreader mounting
TH1 TH138
TH2 TH138
Buzzer
BU1
BUZZER
SPKR
R346 1K
Q4 MMBT3904
R359 75
C455 0.1uF
Mounting holes
MH3
MH4
MH1
MH2
LPC debug
J17
H9X1
C99 0.1uF
SATA activity LED
HDD_ACT#
D8
9LED
220
R106
Fiducial marks
FM6 FIDMARK
FM10 FIDMARK
FM14 FIDMARK
FM8 FIDMARK
FM7 FIDMARK
FM5 FIDMARK
FM12 FIDMARK
FM3 FIDMARK
FM2 FIDMARK
FM16 FIDMARK
FM15 FIDMARK
FM1 FIDMARK
FM13 FIDMARK
FM4 FIDMARK
FM9 FIDMARK
FM11 FIDMARK
LED + switch
LED3#
LED2#
LED1#
R97
R98
R99
RLED3#
RLED2#
RLED1#
D5
D6
D7
1LED
MODESW#
S1
SWITCH
10K R100
Power / reset / watchdog header
U21
RT9818
U23
APR3013
VCC
RST#
GND
R123 1K
10K R131
10K R132
SPIWP#
PWRBTN#
SYSRST#
150 R101
150 R102
WDTO#
C167 0.1uF
C168 0.1uF
J3
H6X1
1-2 = BIOS write protect
2-3 / 3-4 = Power button
4-5 = System reset
5-6 = Watchdog enable
I2C option
J5
iH8X1P
SCL0
SDA0
MODESW#
RLED1#
RLED2#
RLED3#
(C)2016 PC Engines GmbH
Title
LPC bus, LPC UART, front panel
Size B
Document Number
APU
REV 4B
Date: March 4, 2016
Sheet 12 of 18

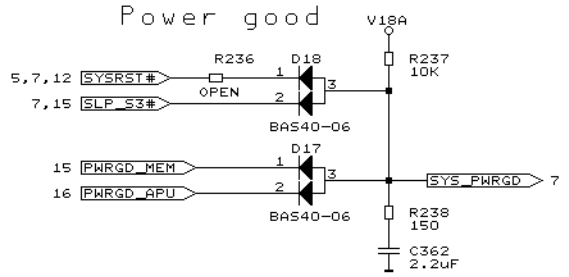

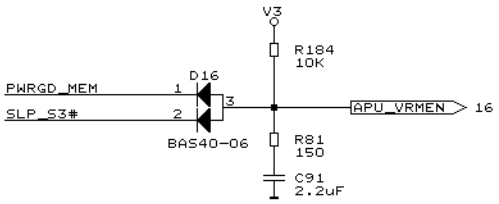

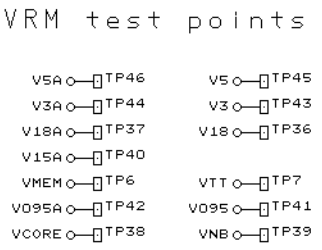

Power sequence:
Turn on after VMEM is good.

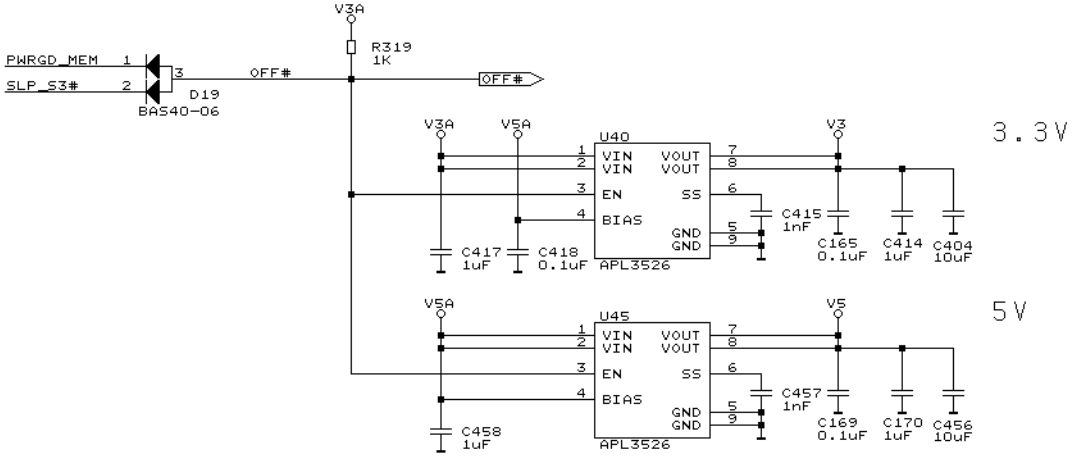

(C)2016 PC Engines GmbH

Title	power good, power switch	
Size B	Document Number APU	REV 4B
Date: December 7, 2016	Sheet 13 of 18	

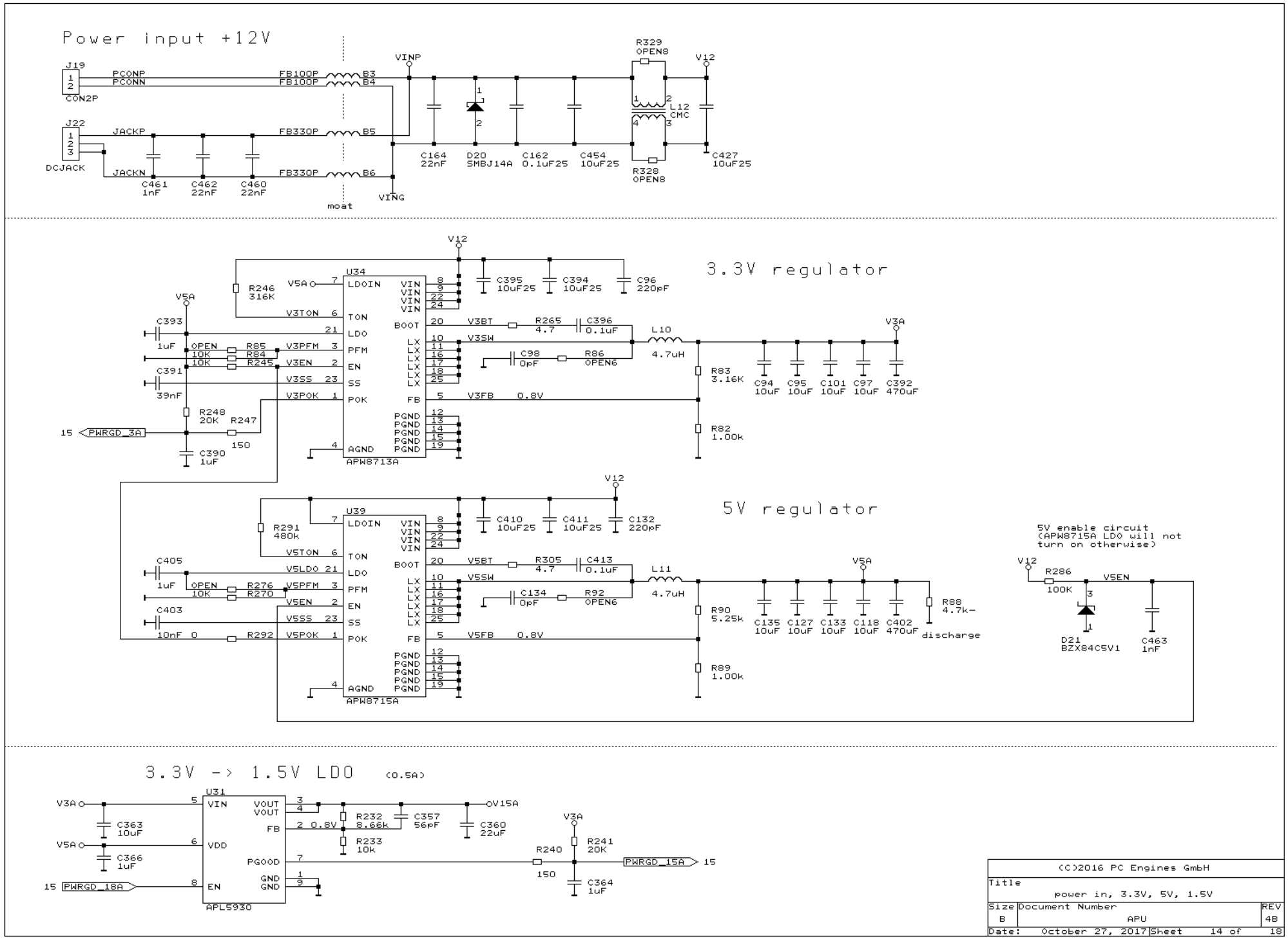

(C)2016 PC Engines GmbH

Title	power in, 3.3V, 5V, 1.5V	
Size B	Document Number APU	REV 4B
Date: October 27, 2017	Sheet 14 of 18	

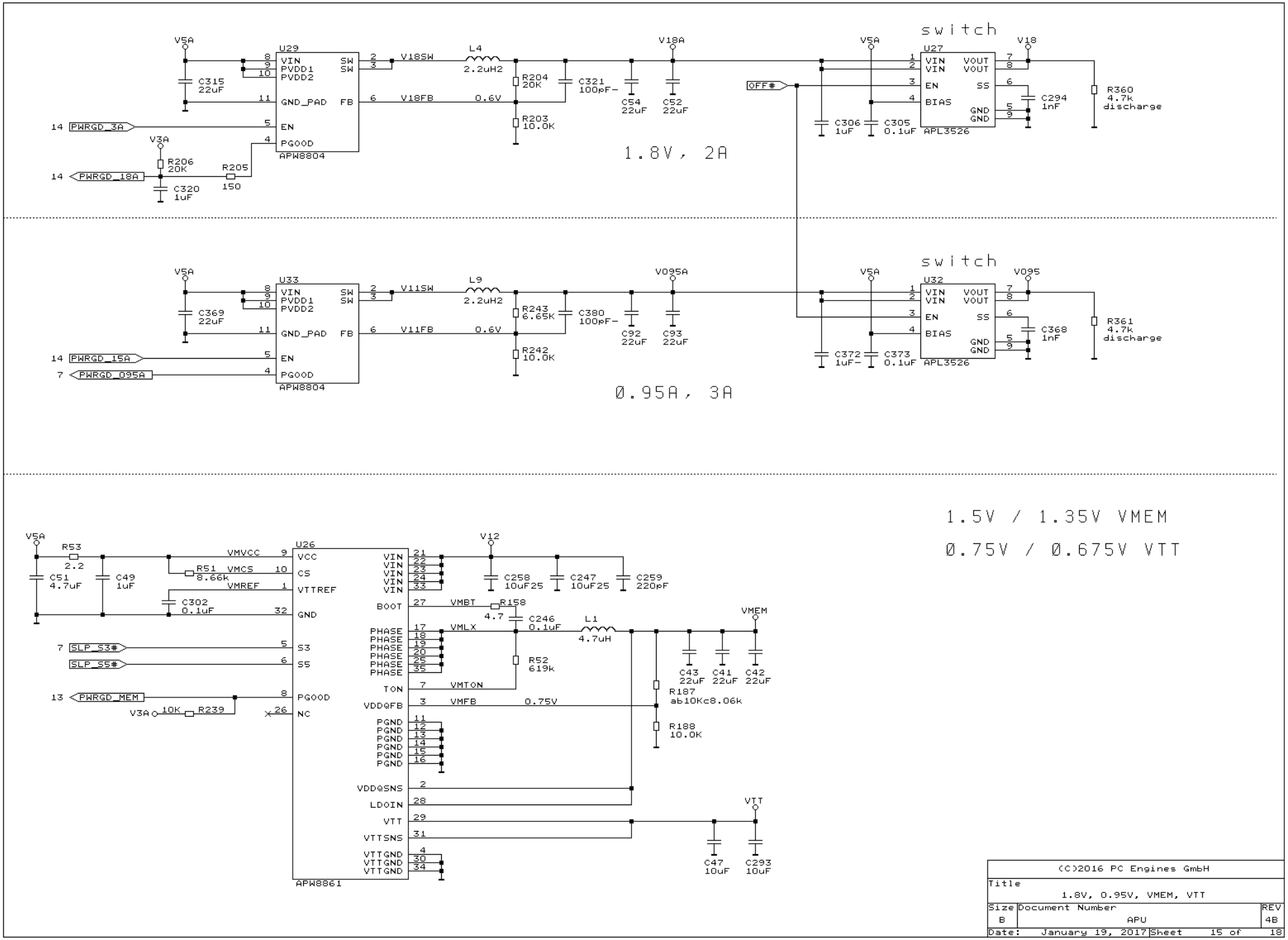

(C)2016 PC Engines GmbH

Title	1.8V, 0.95V, VMEM, VTT	
Size B	Document Number APU	REV 4B
Date: January 19, 2017	Sheet 15 of 18	

VCORE and VNB converter

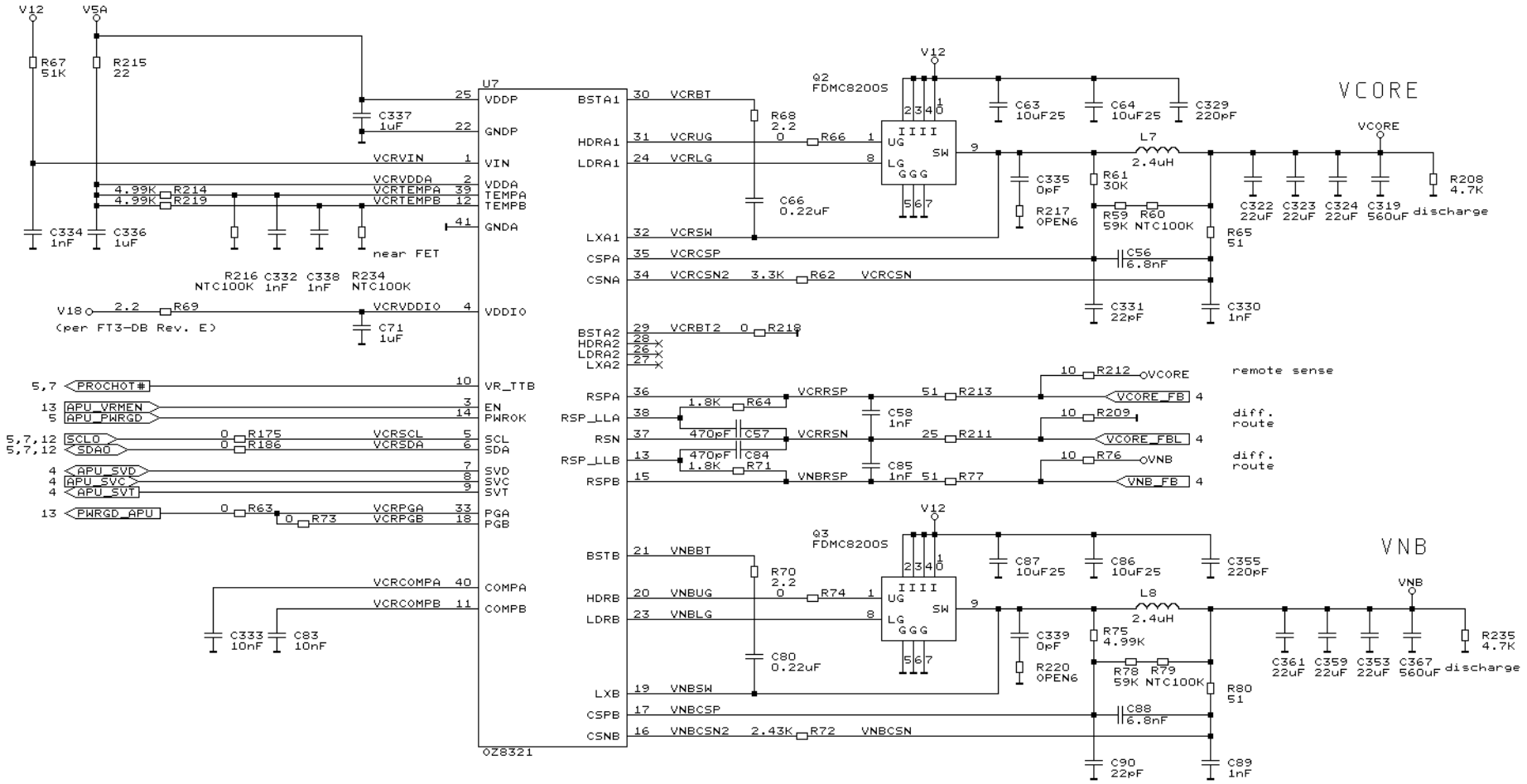

(C)2016 PC Engines GmbH

Title	VCORE, VNB	
Size B	Document Number APU	REV 4B
Date: February 5, 2016	Sheet 16 of 18	

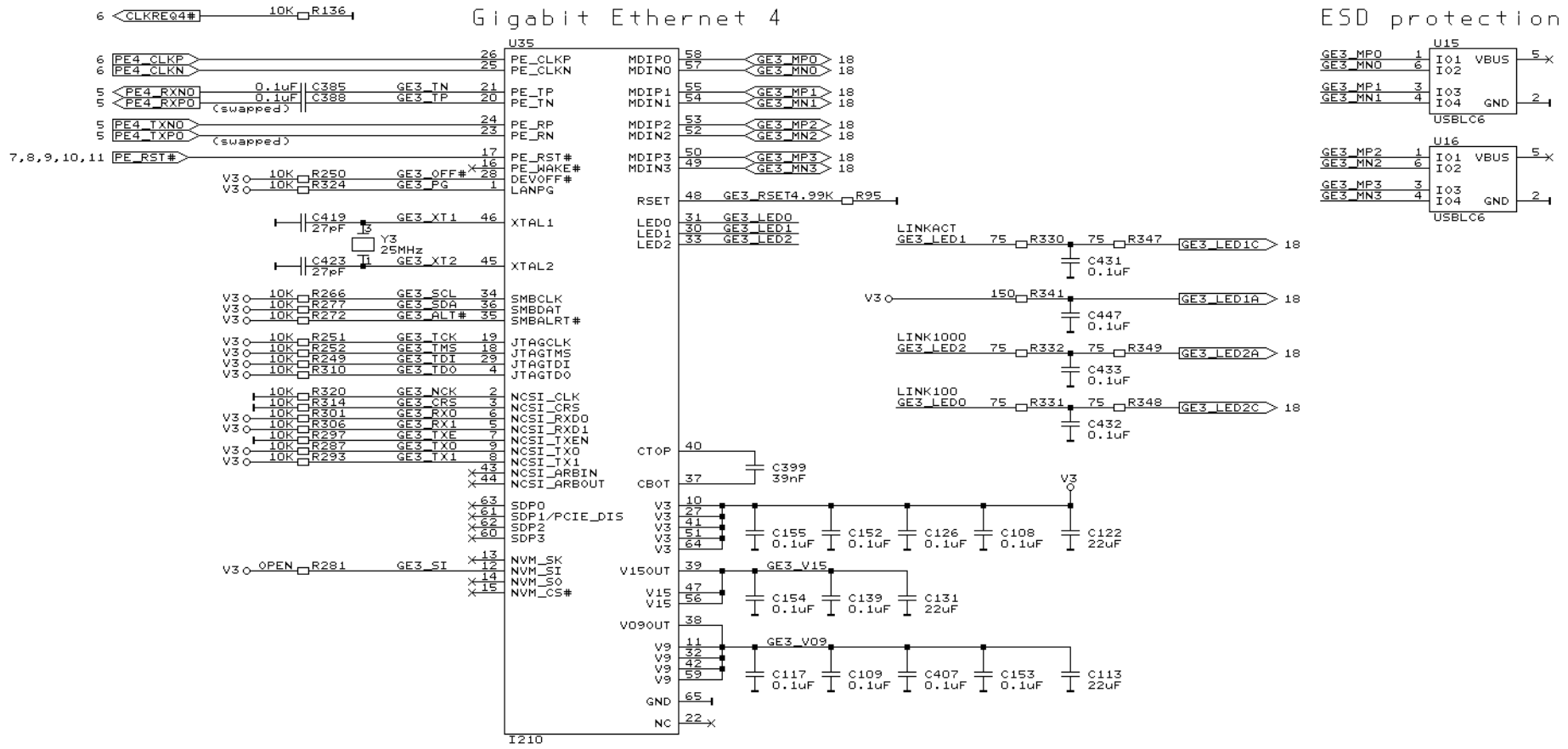

(C)2016 PC Engines GmbH

Title	Ethernet (3)	
Size B	Document Number APU	REV 4B
Date: June 9, 2016	Sheet 17 of 18	

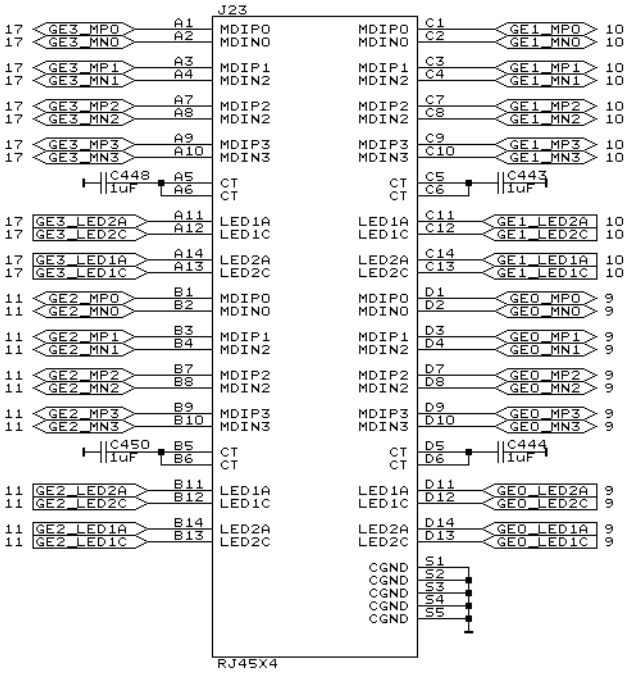

(C)2016 PC Engines GmbH

Title	Ethernet connector	
Size B	Document Number APU	REV 4B
Date: June 7, 2016	Sheet 18 of 18	