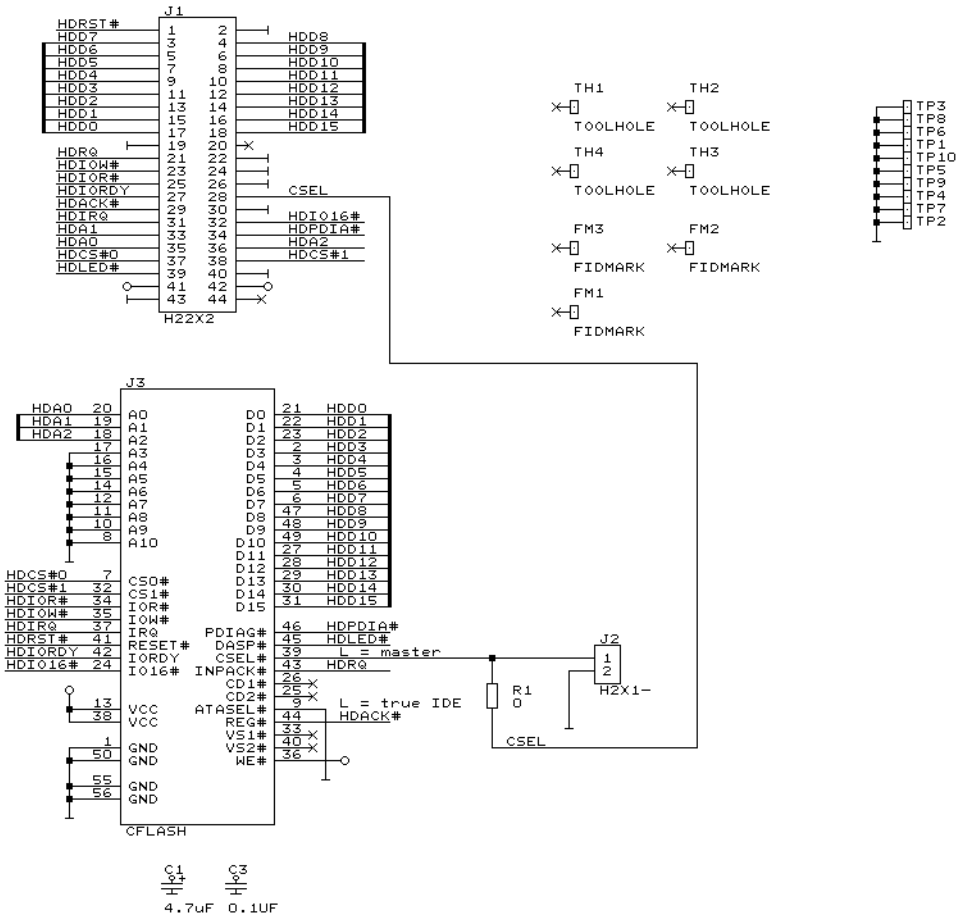

(C)2000-2003 PC Engines GmbH

Title	CompactFlash IDE adapter	
Size B	Document Number CFDISK	REV 2G
Date: November 2, 2004	Sheet 1 of 1	